WSDOT Shaft Design Workshop

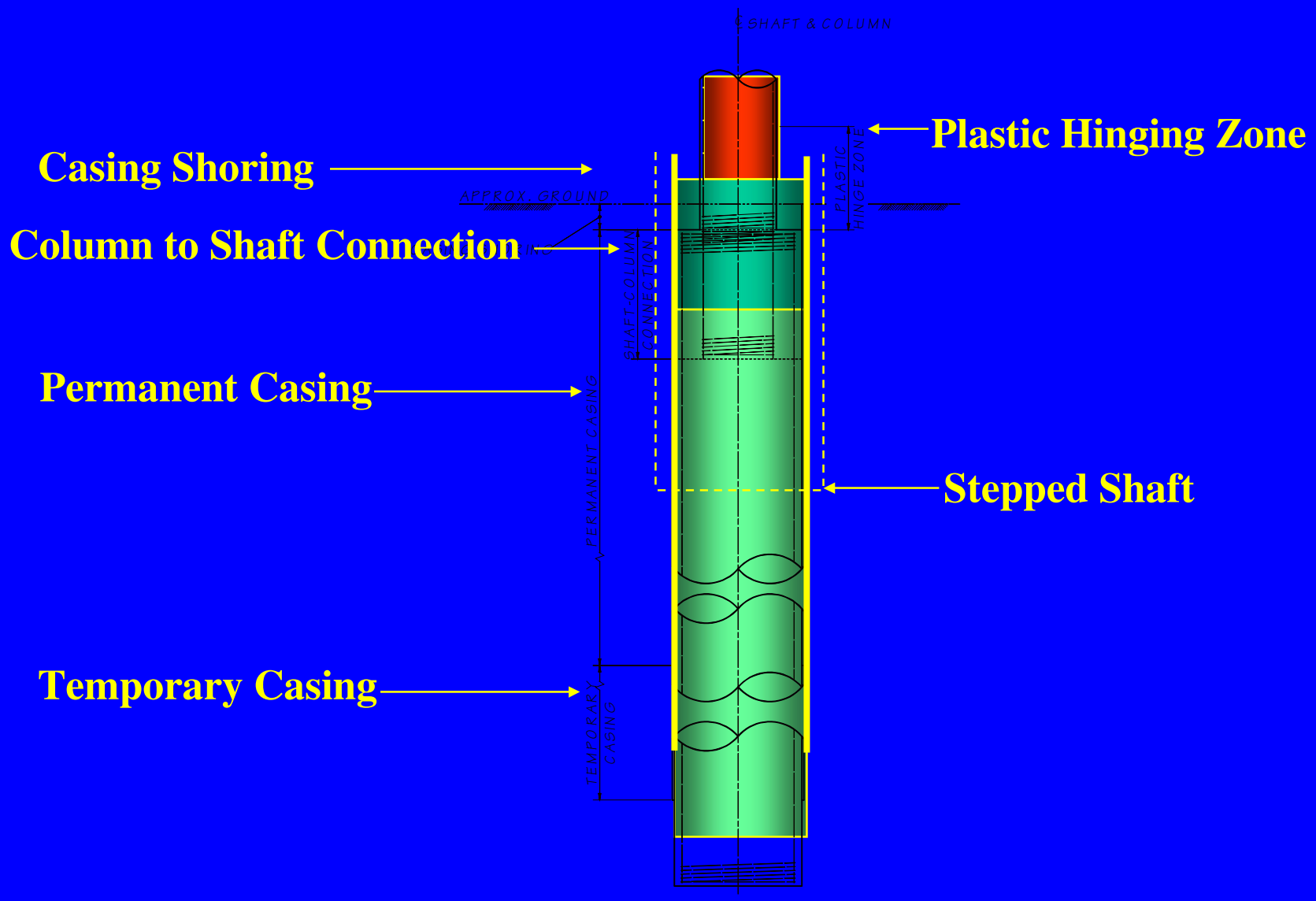

Shaft Terminology

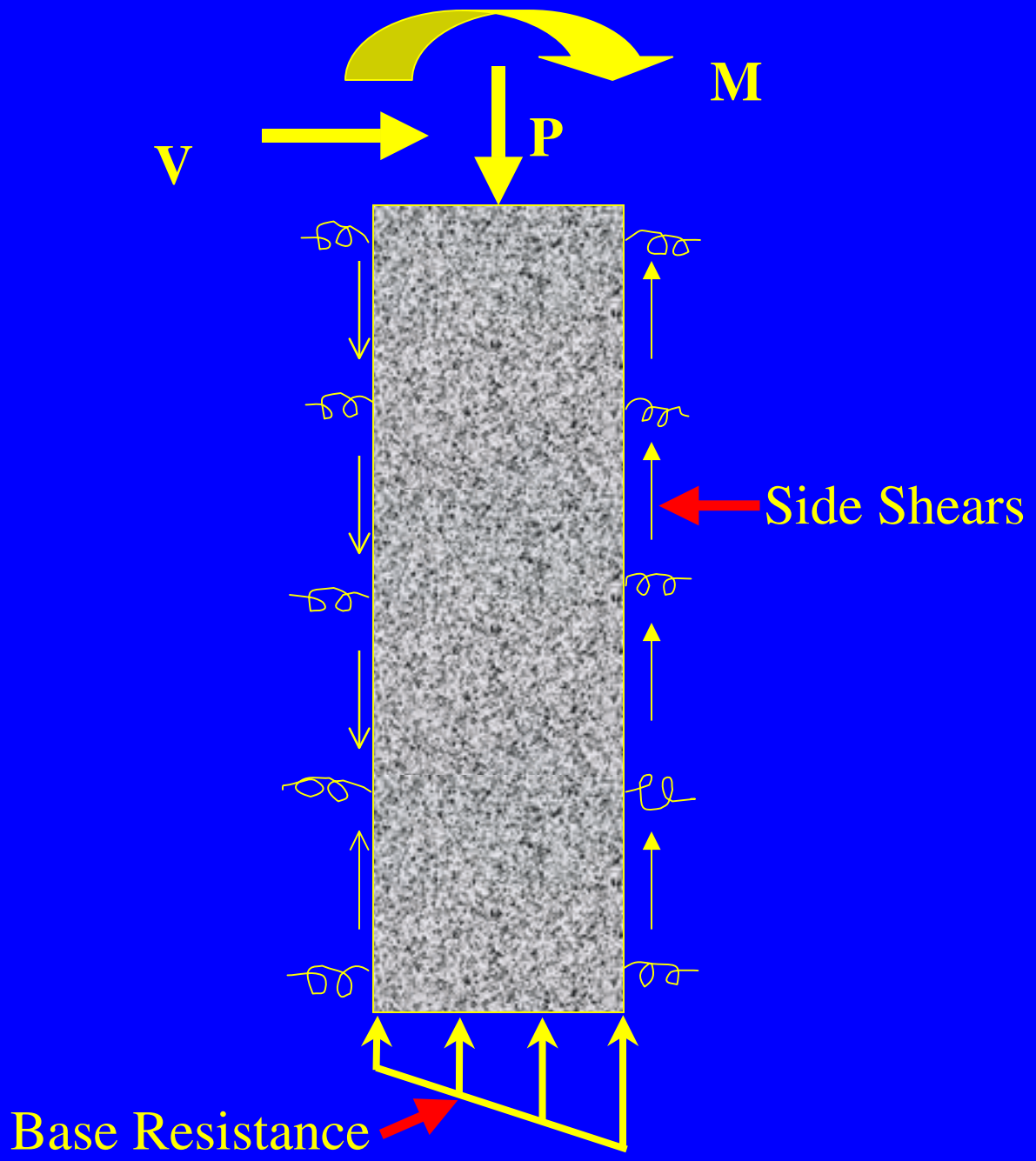
M
V
P
Side Shears
Base Resistance

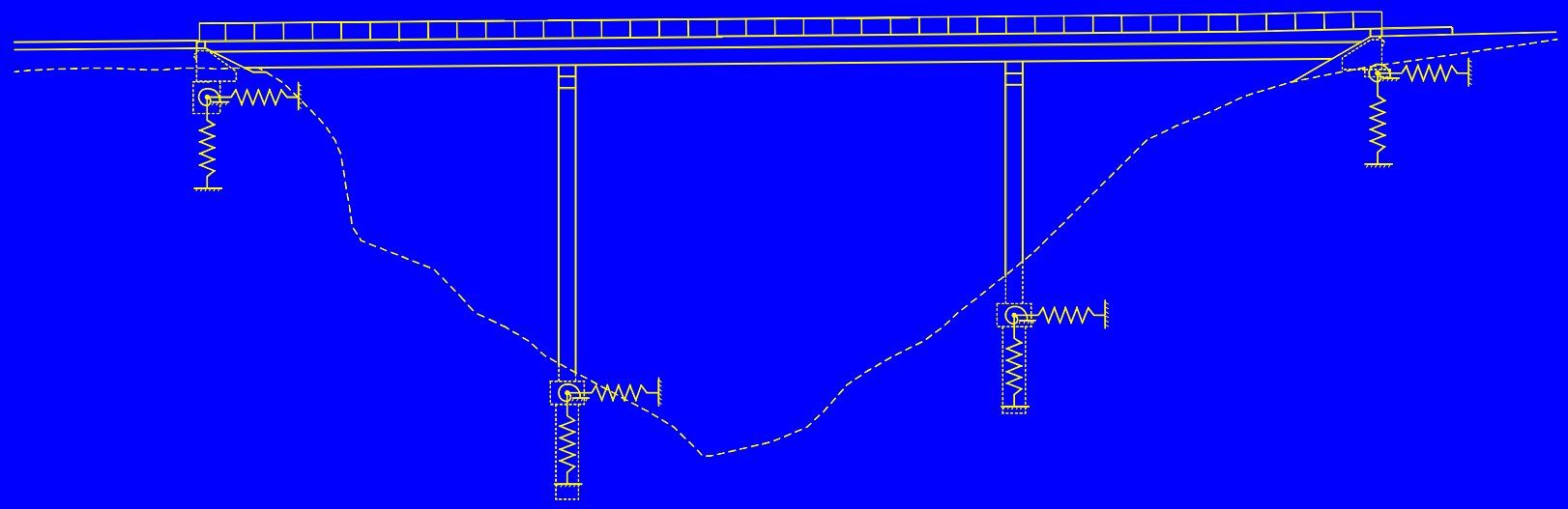

Bridge Finite Element Model

Response Spectra

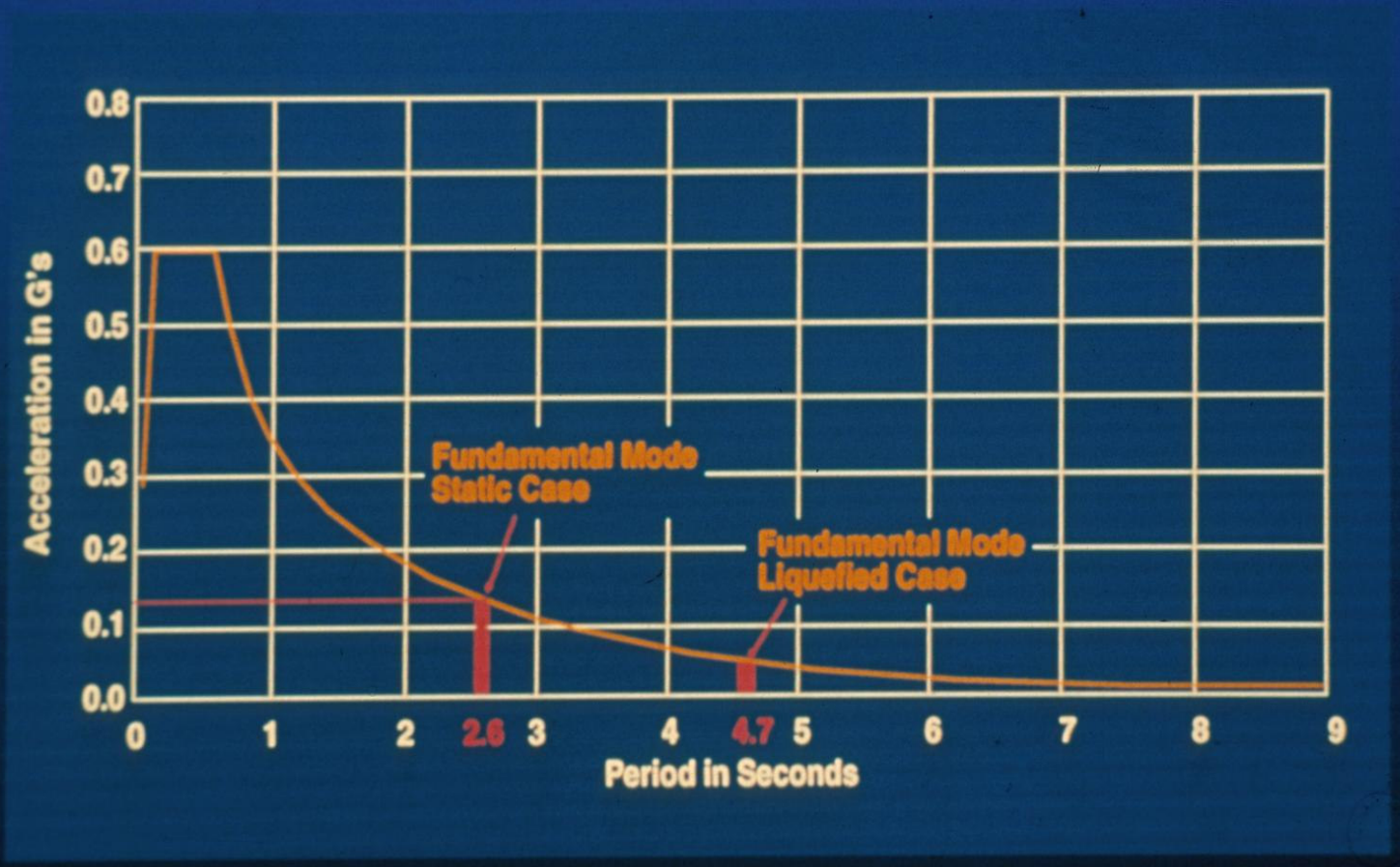

G9509-40

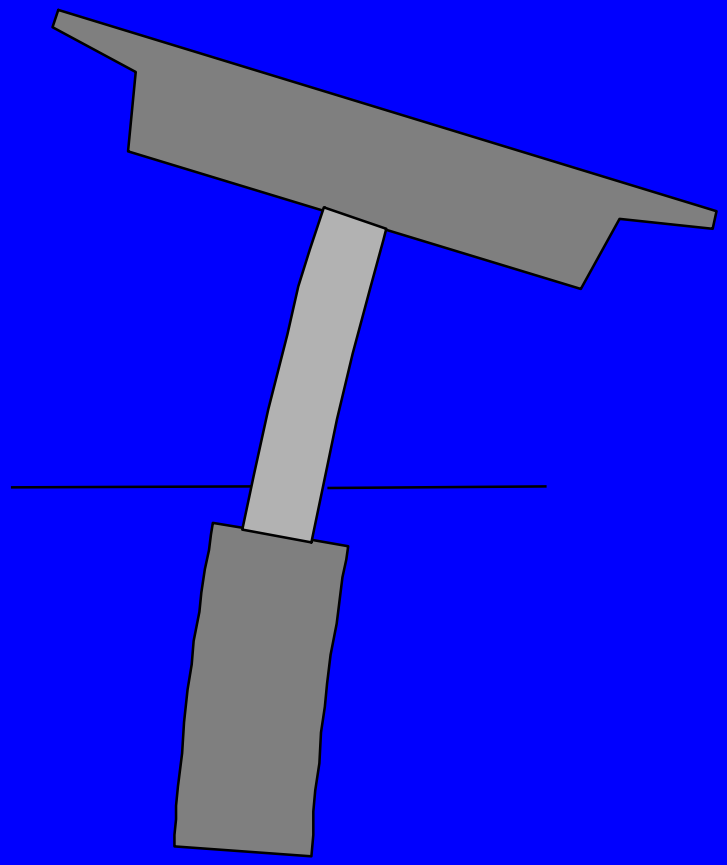

SHAFT FOUNDATION

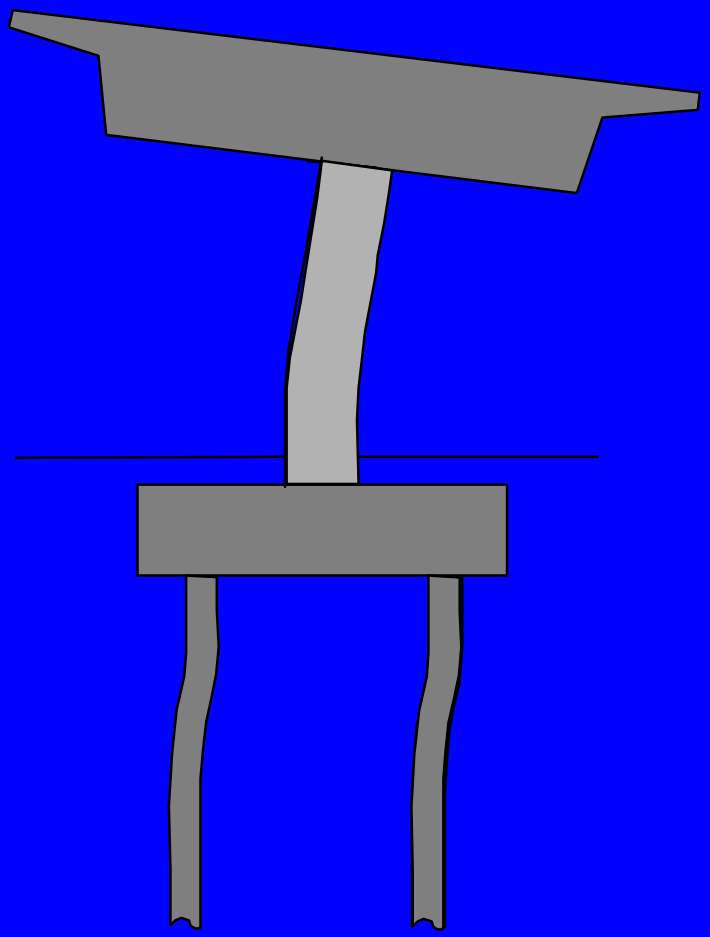

PILE FOUNDATION

STEPPED SHAFTS

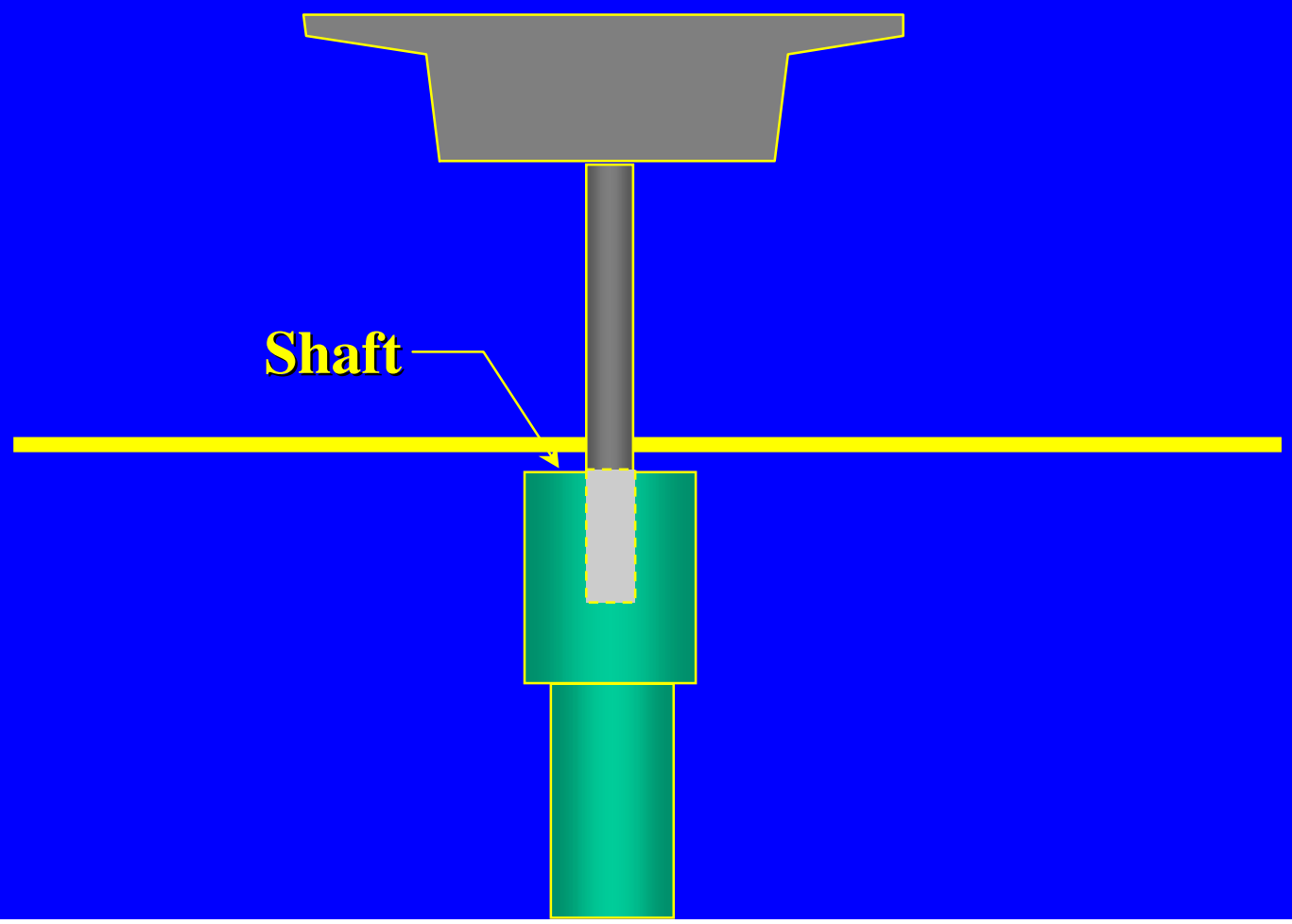

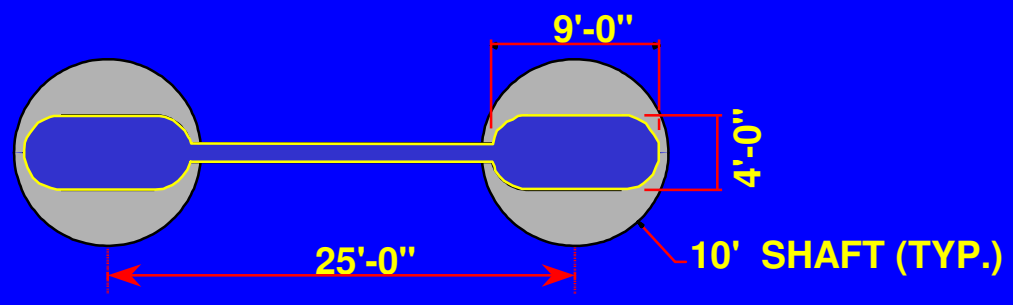

PLAN

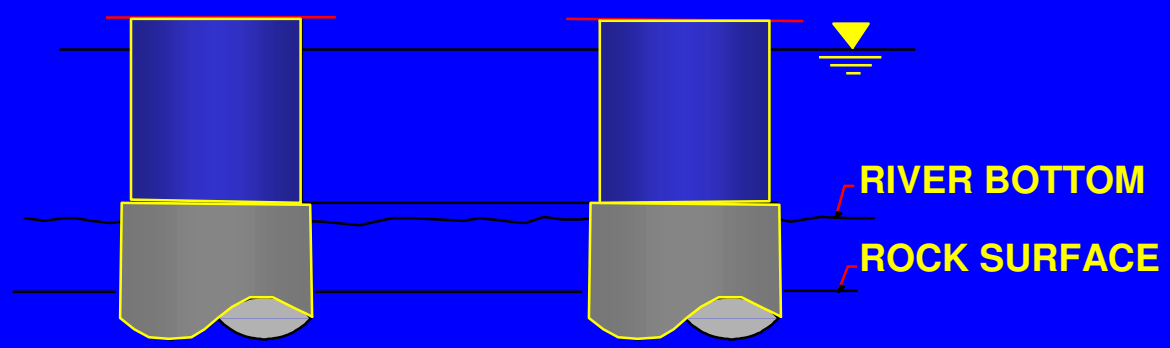

ELEVATION

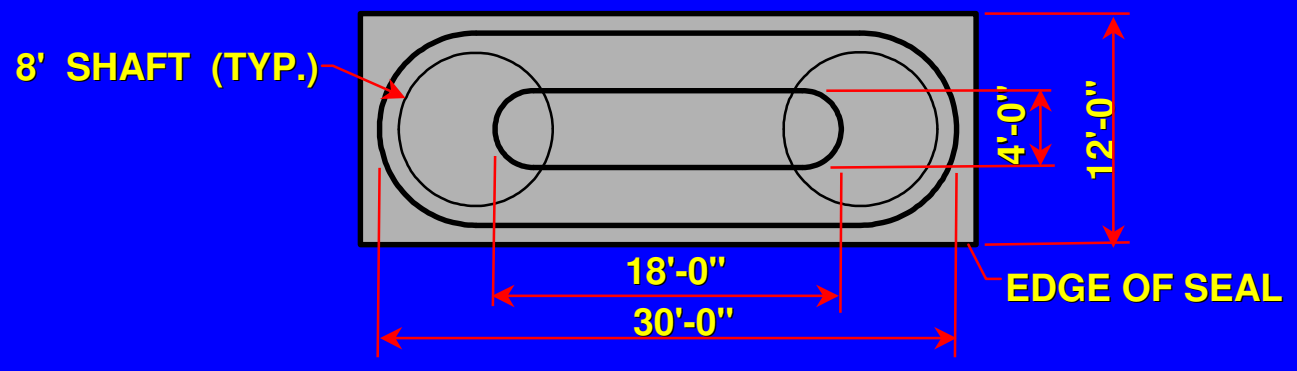

PLAN

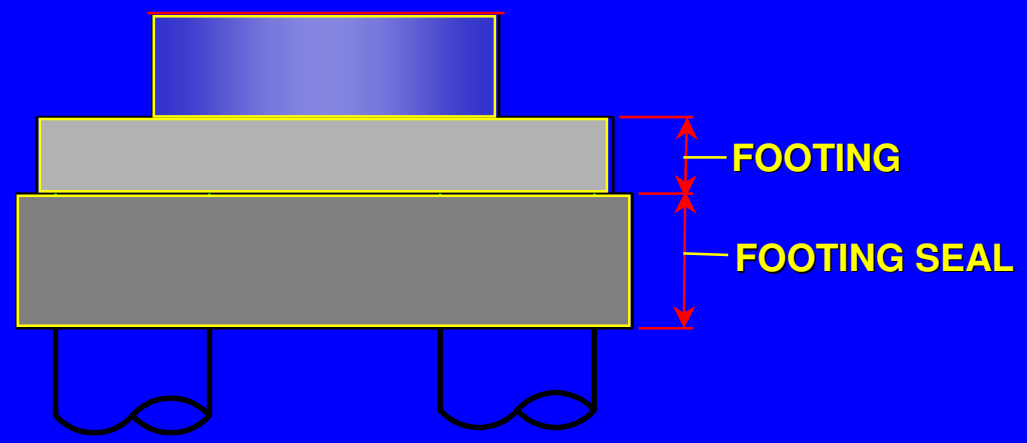

ELEVATION

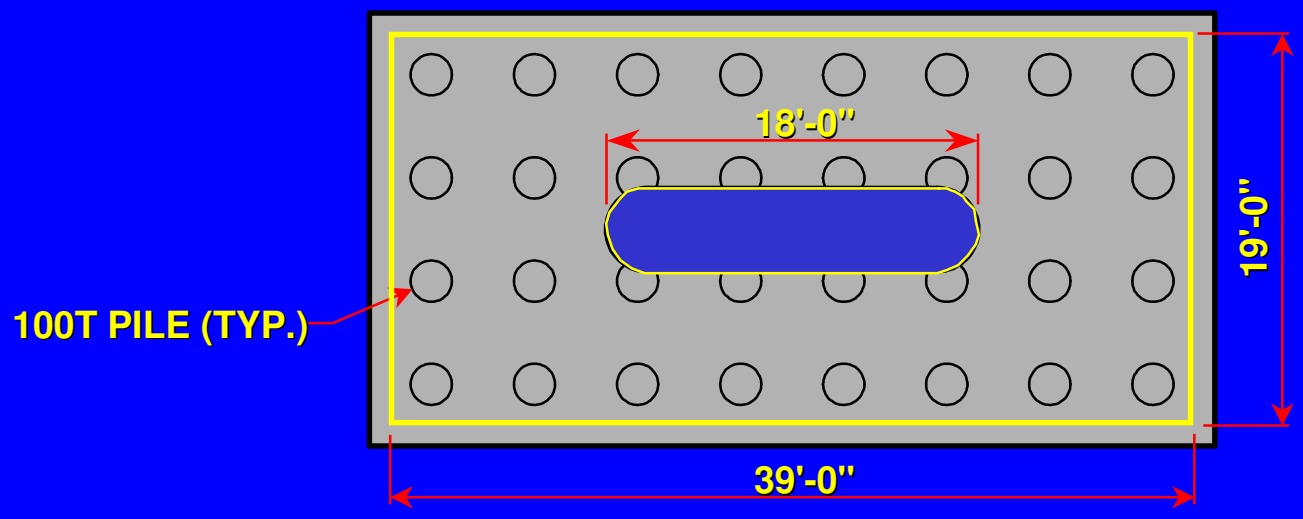

PLAN

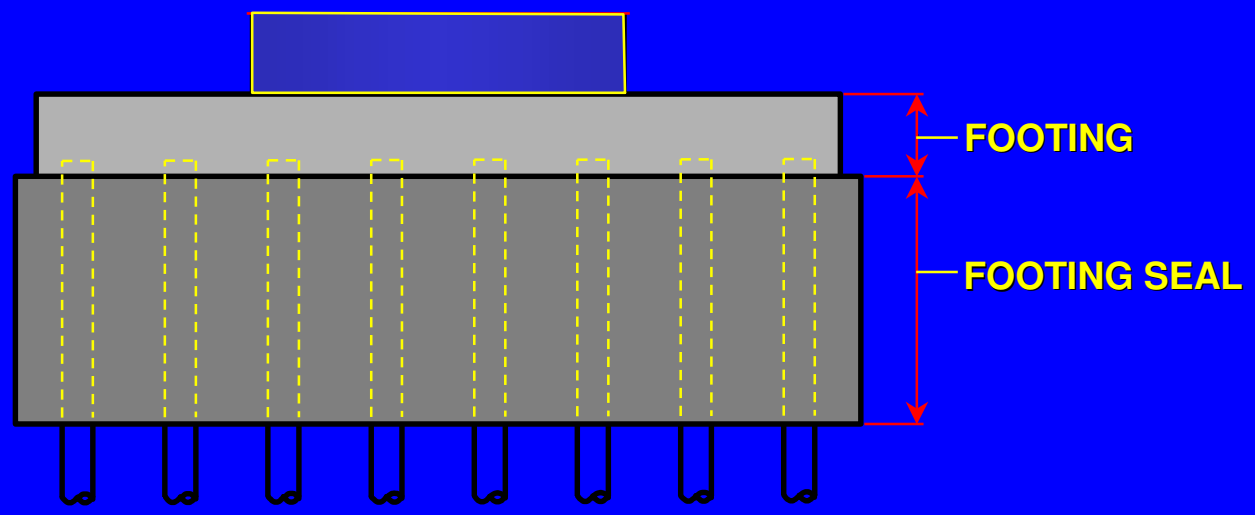

ELEVATION

RESPONSE SPECTRA

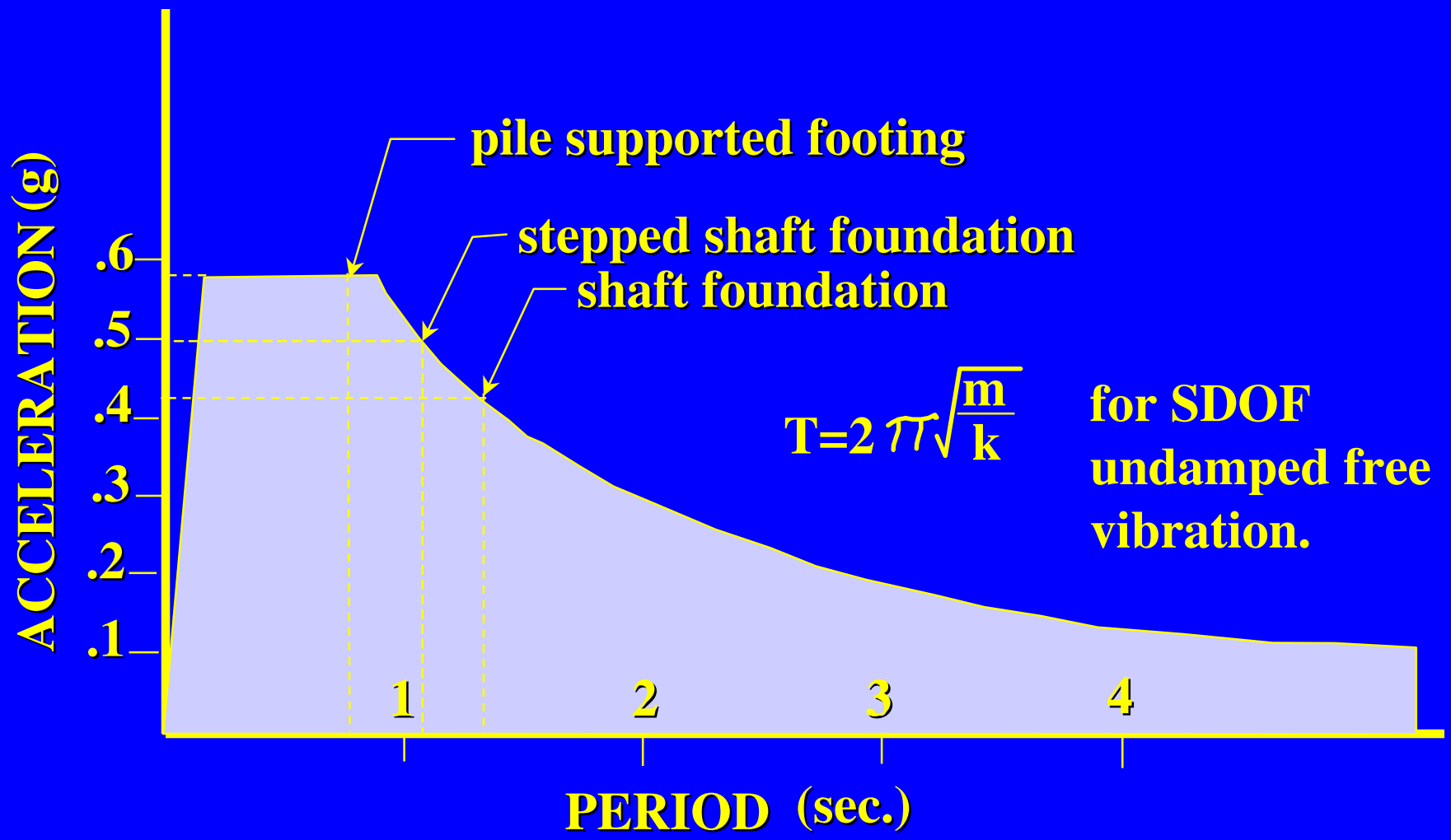

$$T=2\pi\sqrt{\frac{m}{k}}$$

for SDOF undamped free vibration.

WHY USE SHAFT FOUNDATIONS?

- Construction clearances prevent use of standard foundation types.
- Eliminate large cofferdams.
- Eliminate large shoring walls for foundations on side slopes.

WHY USE SHAFT FOUNDATIONS?

- Reduce impact of foundations in streams.
- Decrease seismic forces at piers.
- Shorten construction time.
- Adjacent structures cannot tolerate pile driving vibrations.

Shafts For Widenings

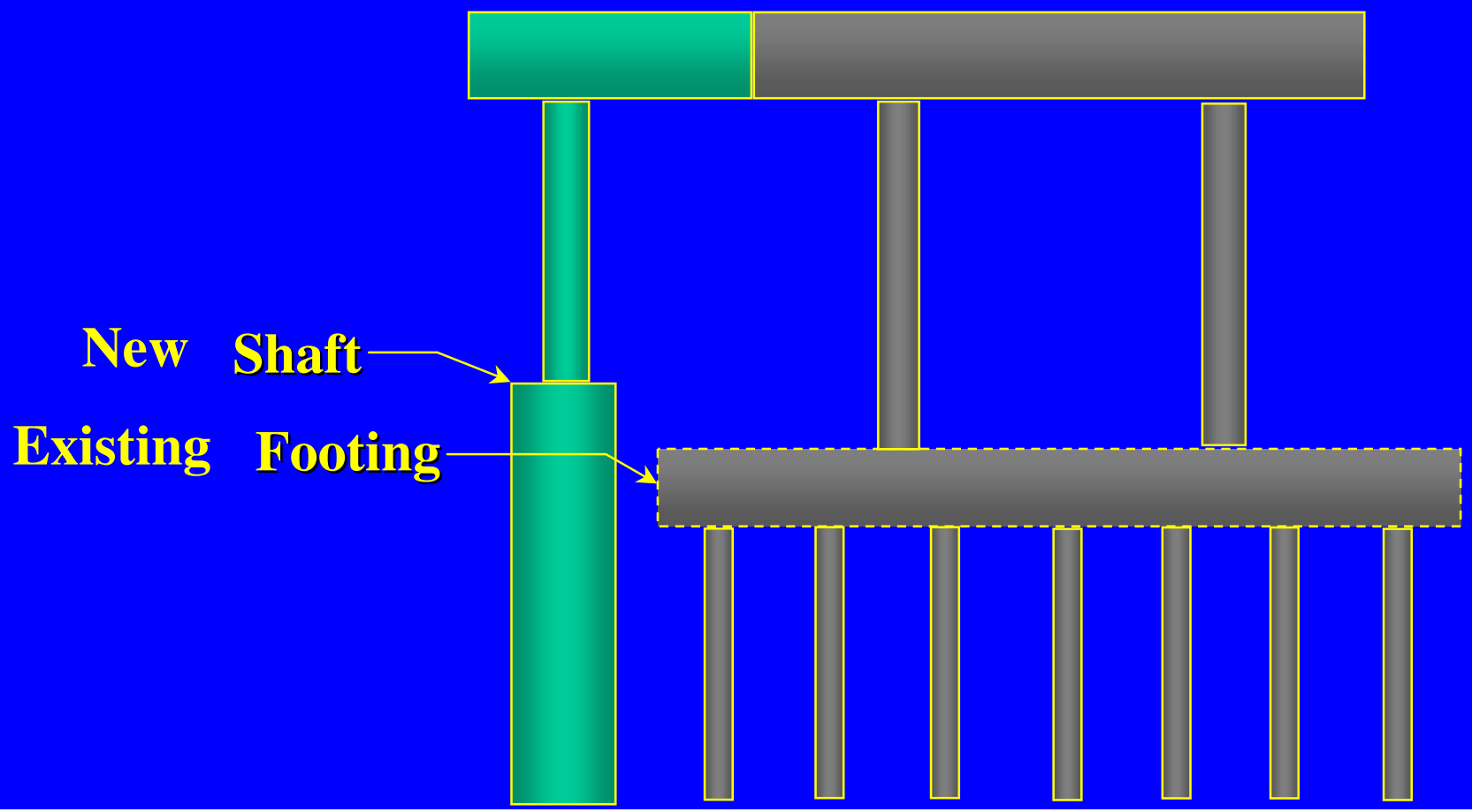

FOUNDATIONS ON SIDE SLOPES

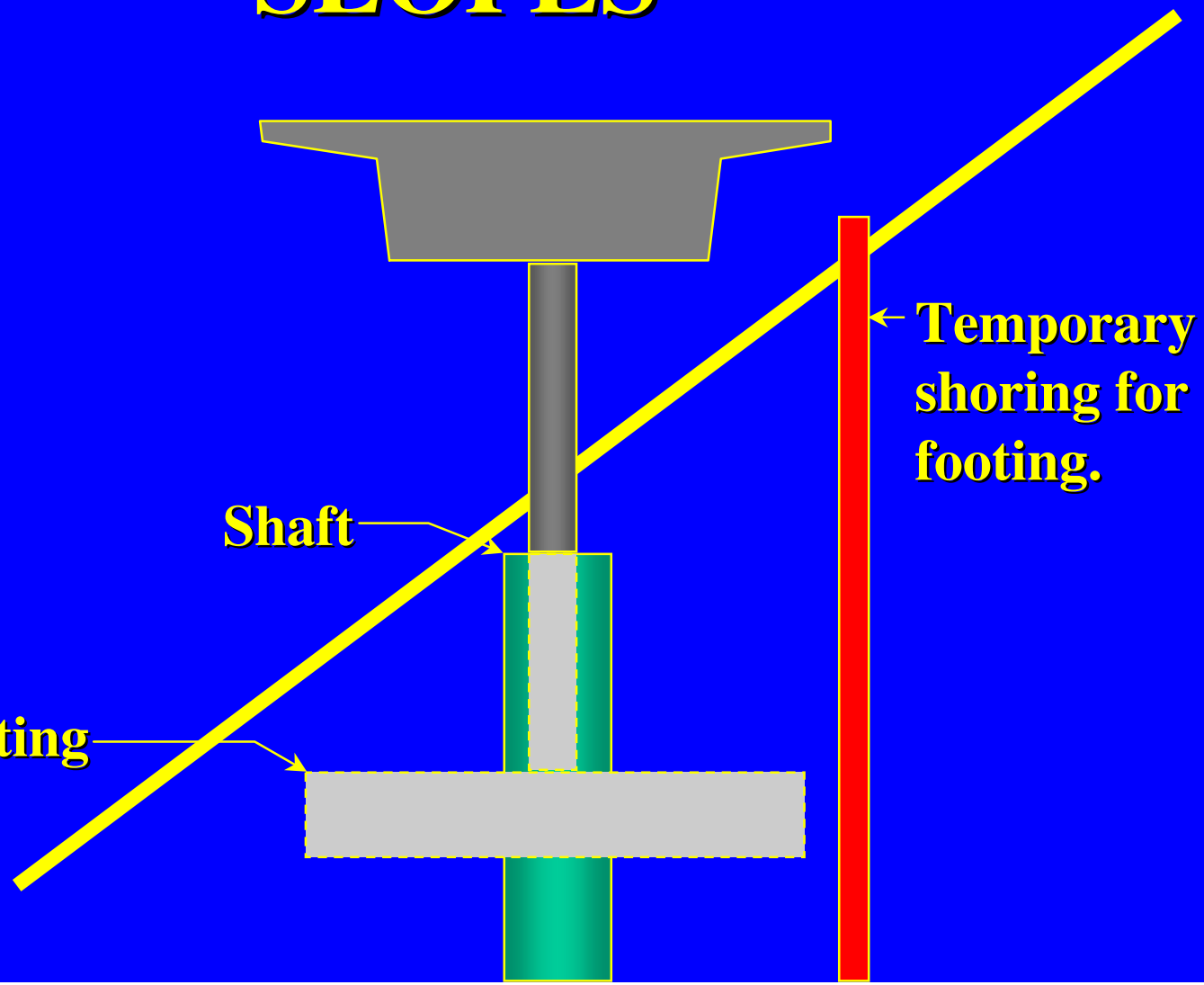

85-0159
B W
BARRIER
WEST

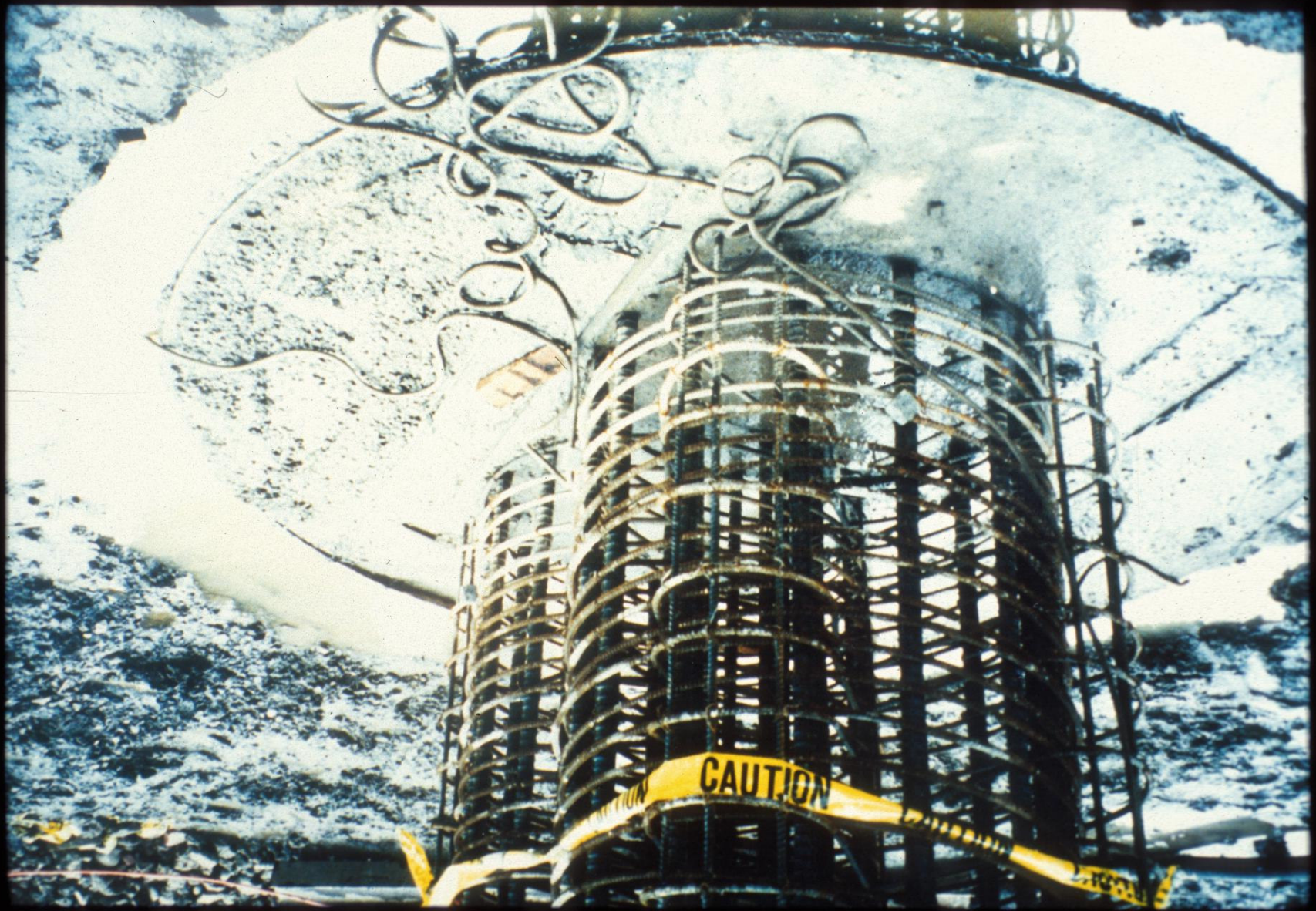
CAUTION

30-6

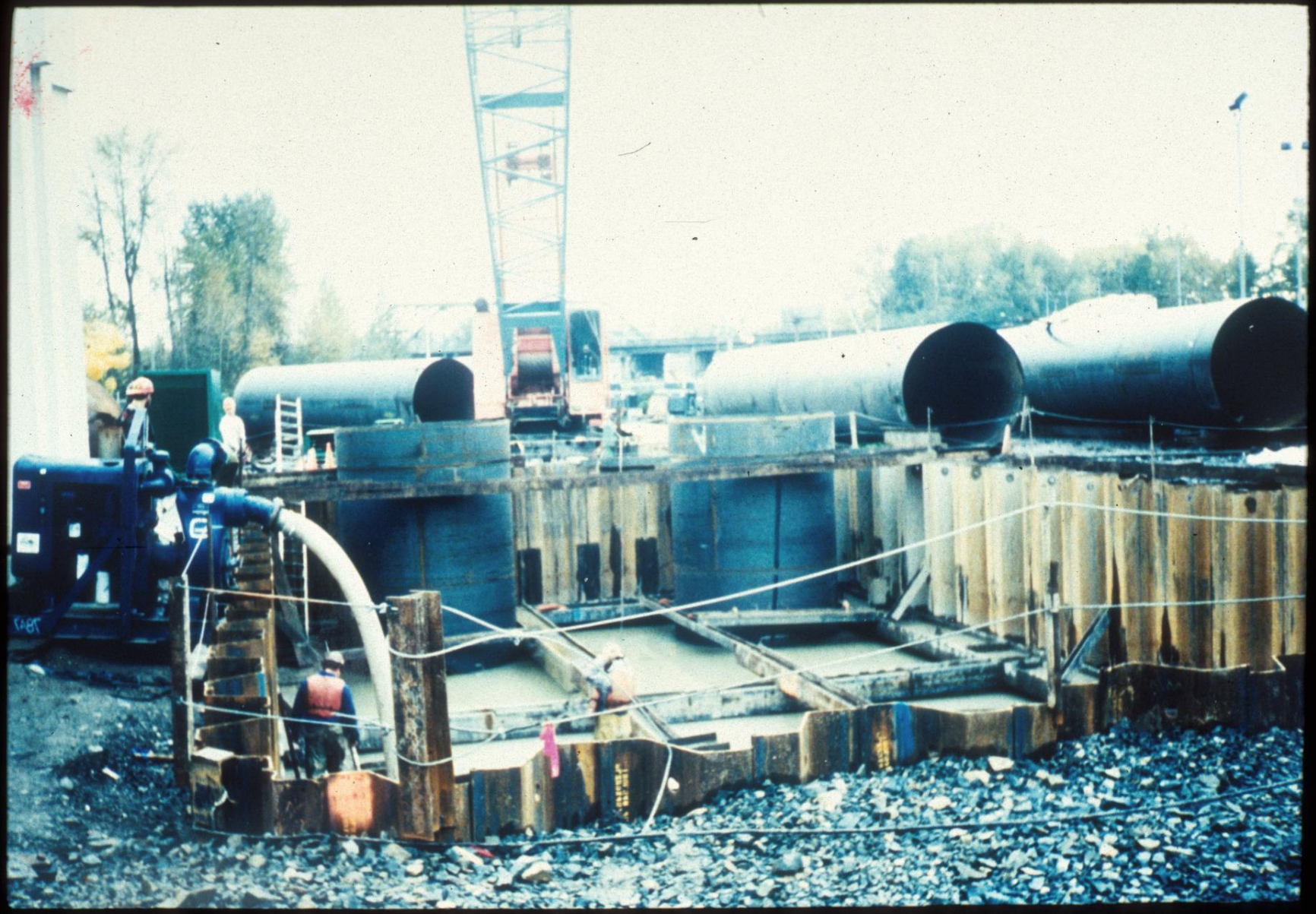

SEC. 1, T.27N., R.1E., W.M.
KITSAP COUNTY

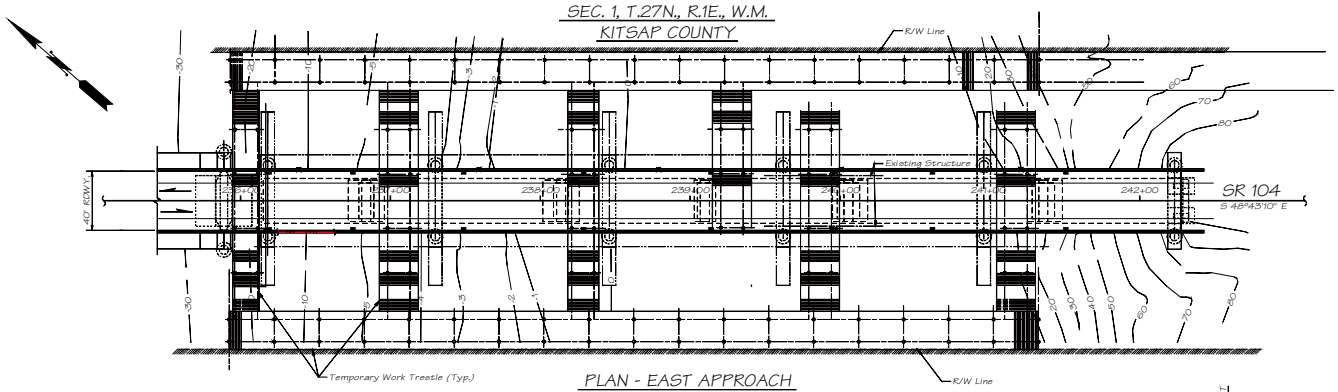

PLAN - EAST APPROACH

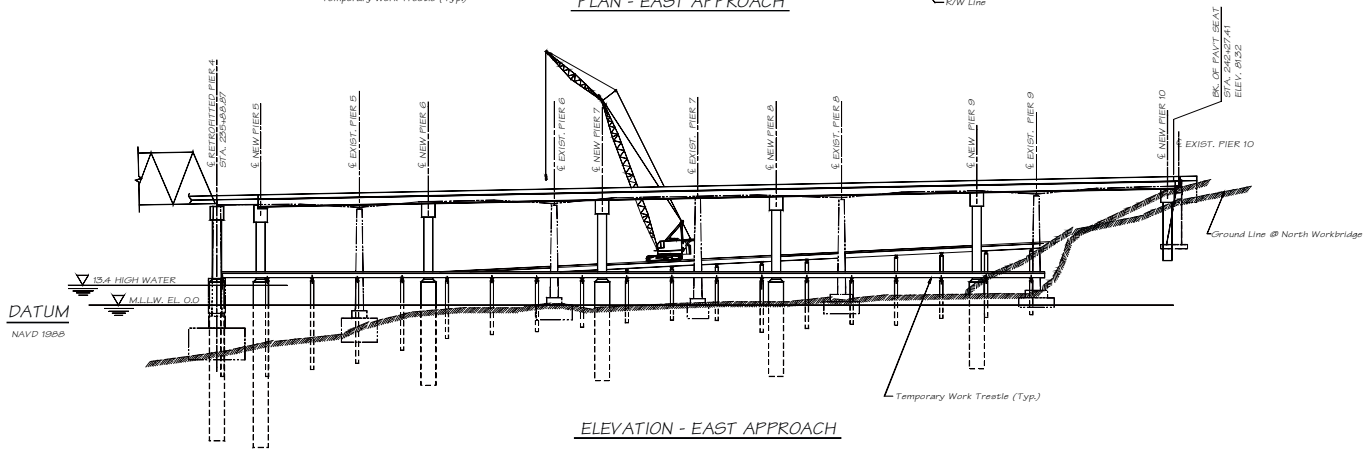

ELEVATION - EAST APPROACH

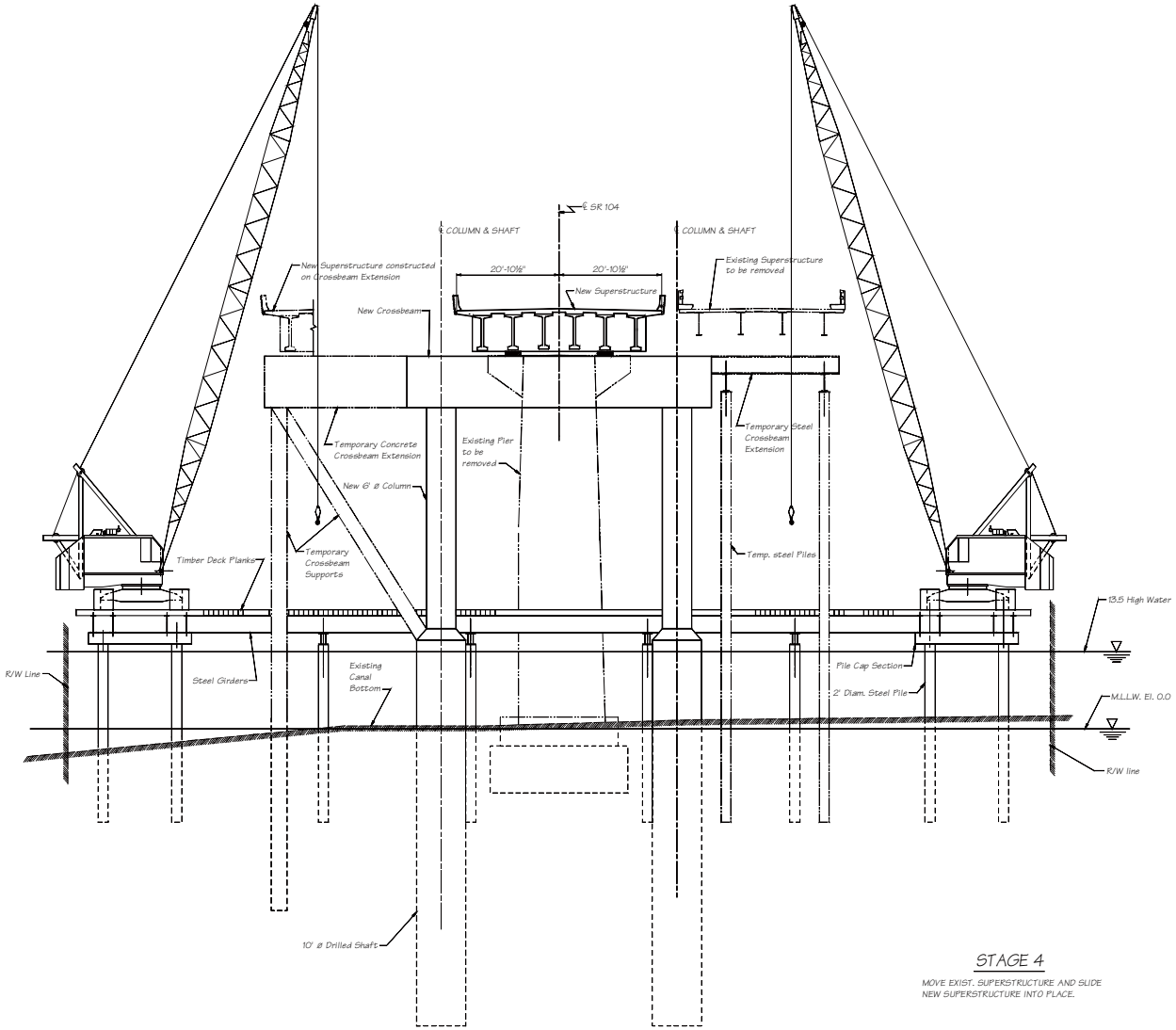

STAGE 4

MOVE EXIST. SUPERSTRUCTURE AND SLIDE NEW SUPERSTRUCTURE INTO PLACE.

CURRENT WSDOT PROCEDURE FOR SHAFT DESIGN

- Receive soil parameters from geotech.
- Preliminary selection of column size.
- Select minimum shaft size based on column size.
- Obtain preliminary shaft loads from SEISAB, STRUDL or SAAP model. Make first run of model with fixed base, increase column effective length to account for foundation flexibility. Use column forces from joint at top of foundation.

CURRENT WSDOT PROCEDURE FOR SHAFT DESIGN

- Use Lpile or S-Shaft to model soil shaft interaction.
- Apply preliminary loads to Lpile model to obtain displacements.
- Use loads & displacements to create 6x6 stiffness matrix.
- Run structure model with new foundation springs.
- Repeat steps until loads and or deflections converge.

•Receive soil parameters from geotechnical engineer.

PIER 1 - Static and Dynamic (post-liquefaction) Analyses

Ground Surface Elevation = 15.3 m (SE8-1-00)

					STATIC ANALYSES									
Soil Layer	Depth Below Ground Surface		Soil Type	Soil Profile Type (KSOIL)	Effective Unit Weight of Soil			Saturated Undrained Strength, Su			Axial Strain ε_{50}	Friction Angle ϕ	Modulus of Subgrade Reaction	
	m	ft			kN/m3	pci	pcf	kPa	psi	psf	(%)	(deg)	MN/m3	pci
1	0 to 3.7	0 to 12	SAND	4	20.4	0.075	130	0.0	0.0	0.0	-	35	37	135
2	3.7 to 7.6	12 to 25	SAND	4	18.9	0.069	120	0.0	0.0	0.0	-	33	24	90
3	7.6 to 14	25 to 46	SAND	4	9.1	0.034	58	0.0	0.0	0.0	-	31	9	35
4	Below 14	Below 46	SAND	4	9.1	0.034	58	0.0	0.0	0.0	-	40	38	140

					DYNAMIC ANALYSES									
Soil Layer	Depth Below Ground Surface		Soil Type	Soil Profile Type (KSOIL)	Effective Unit Weight of Soil			Saturated Undrained Strength, Su			Axial Strain ε_{50}	Friction Angle ϕ	Modulus of Subgrade Reaction	
	m	ft			kN/m3	pci	pcf	kPa	psi	psf	(%)	(deg)	MN/m3	pci
1	0 to 3.7	0 to 12	SAND	4	20.4	0.075	130	0.0	0.0	0.0	-	35	37	135
2	3.7 to 7.6	12 to 25	SAND	4	18.9	0.069	120	0.0	0.0	0.0	-	33	24	90
3	7.6 to 14	25 to 46	Soft Clay	1	9.1	0.034	58	14.4	2.1	300.0	0.010	0	-	-
4	Below 14	Below 46	SAND	4	9.1	0.034	58	0.0	0.0	0.0	-	40	38	140

Soils Data for Generation of P-Y Curves

$$Q_R = Q_p + Q_s$$

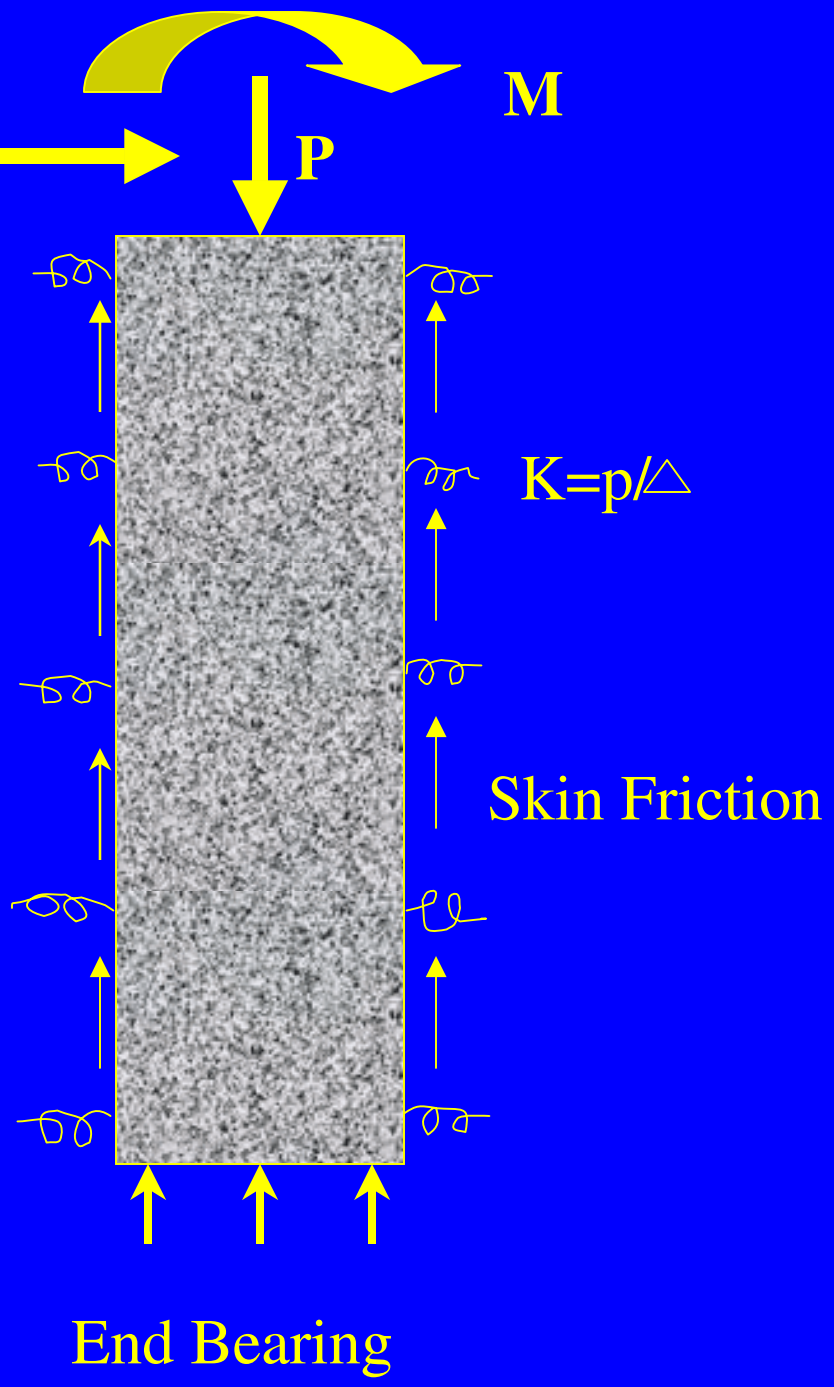

- **Preliminary selection of column size.**
- **Select minimum shaft size based on column size.**

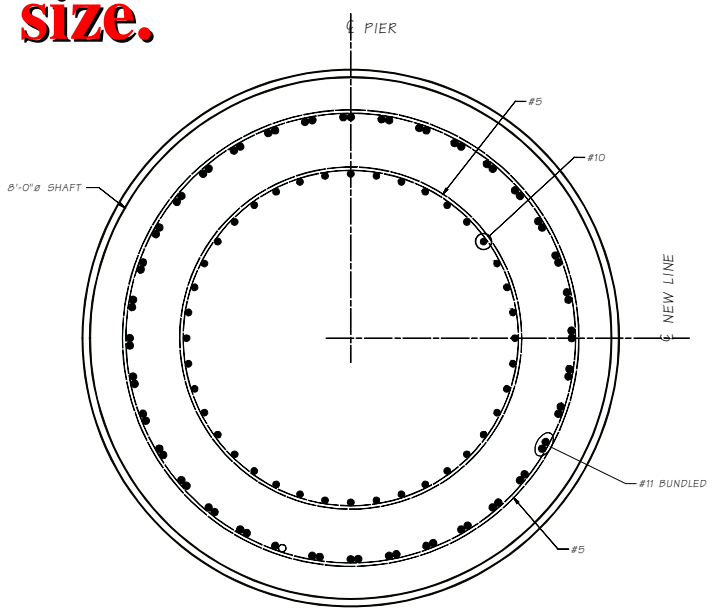

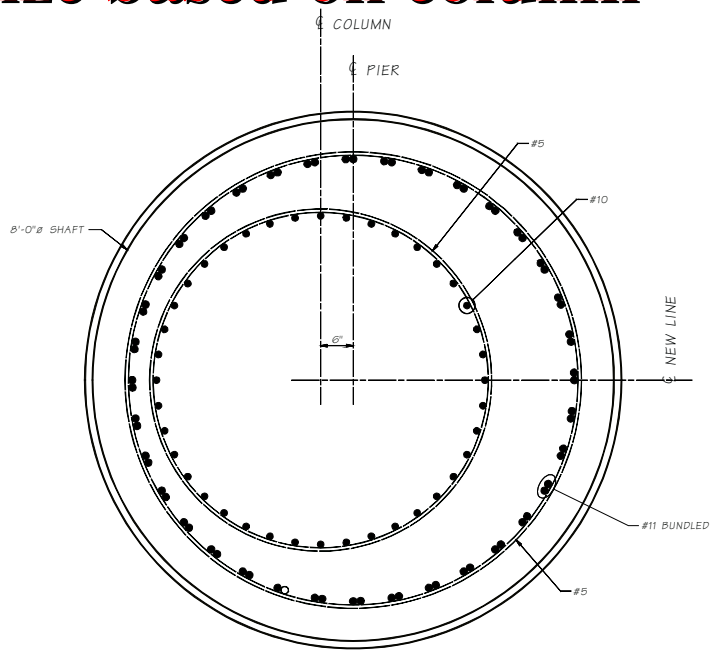

Allowance for Construction Tolerance

- **Preliminary selection of column size.**
- **Select minimum shaft size based on column size.**

MAXIMUM SHAFT SHORING DIAMETER

SHAFT DIA.	CONSTR. TOL.	CONC. COVER SHAFT	THICKNESS REIN. CAGE	COLUMN DIA. MAX.	SHAFT SHORING DIA.
4’	4”	4”	2.1”	2’-0”	5’-6”
5’	5”	5”	2.6”	2’-6”	6’-3”
6’	6”	6”	2.6”	3’-0”	7’-0”
7’	6”	6”	2.6”	4’-0”	8’-0”
8’	6”	6”	3.3”	4’-6”	9’-0”
9’	6”	6”	3.3”	5’-6”	10’-0”
10’	6”	6”	3.3”	6’-6”	11’-0”

Max. Col. Dia. = (Shaft Dia.) - 2*(Conc. Cvr.) - 2*(Constr. Tol.) - 4*(Thickness Cage)

Max. Shaft Shoring Dia. Based on 1’-0” min. clr. to column for forming.
Therefore, Shaft Shoring Dia. = (Shaft Dia.) + 2*(1’-0” clr.) - 2*(Conc. Cvr.)

2.1” Cage Thickness assumes a #11 vert. & #4 spiral
2.6” Cage Thickness assumes a #14 vert. & #5 spiral
3.3” Cage Thickness assumes a #18 vert. & #16 spiral

Construction tolerances and concrete cover for shafts are per our Special Provisions.

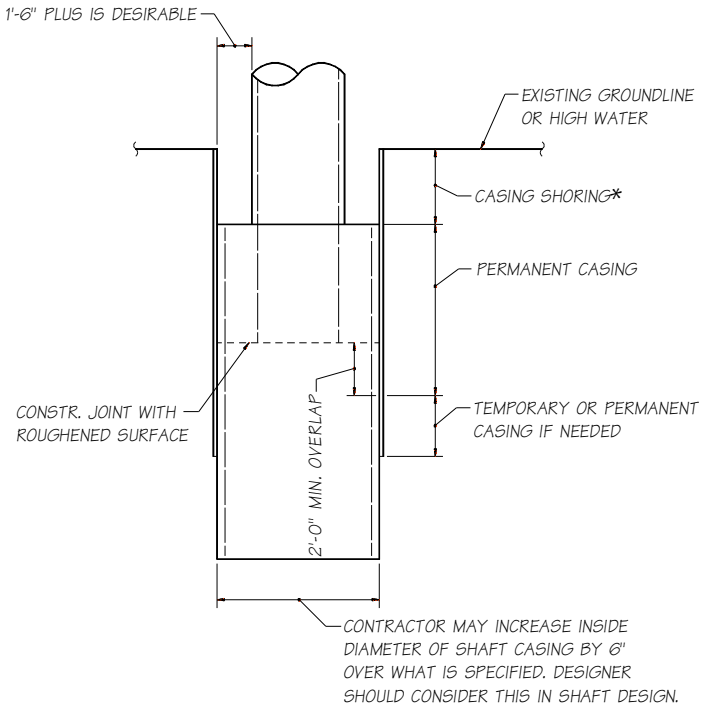

SHAFT CASING DETAILS IN SHALLOW EXCAVATIONS AND LOW WATER

* WHEN THIS DIMENSION EXCEEDS 3'-0" USE "SHAFT CASING DETAILS IN DEEP EXCAVATIONS OR HIGH WATER".

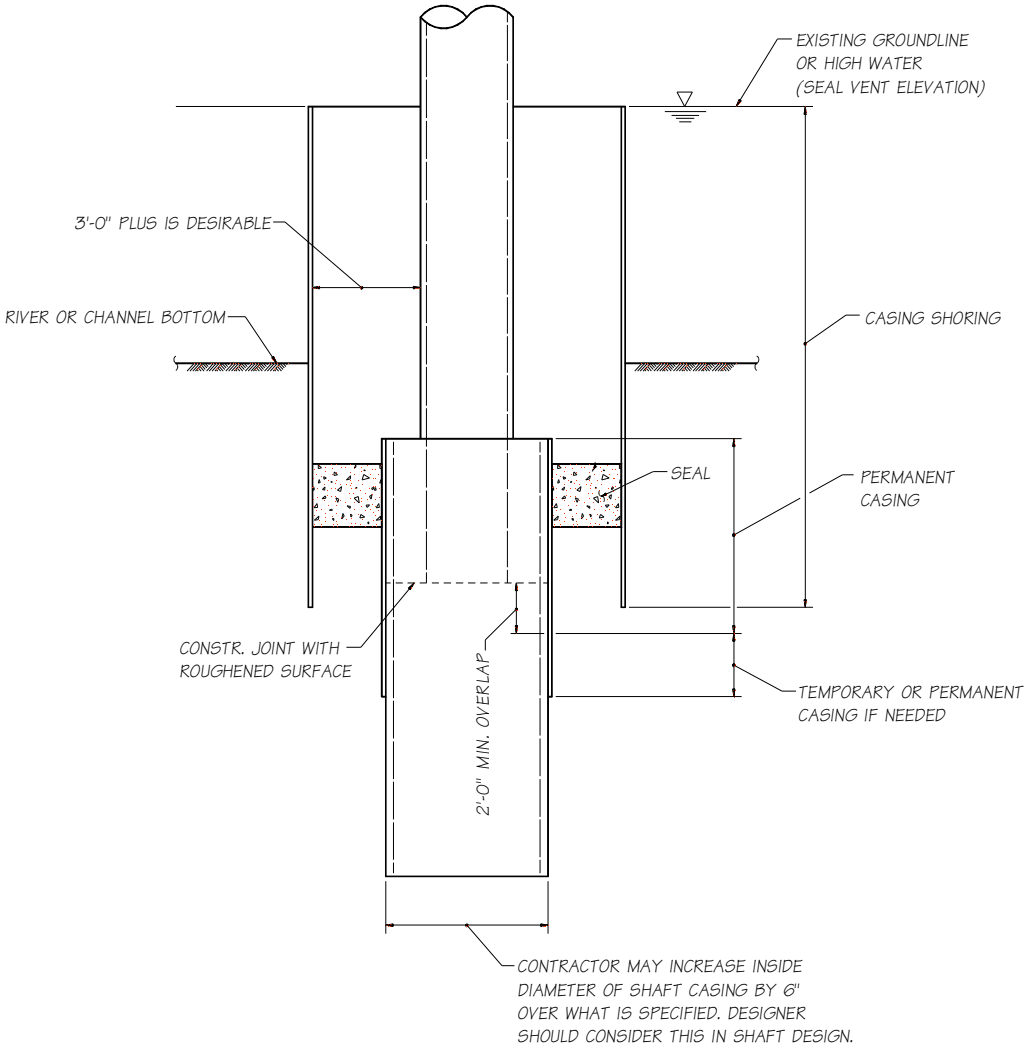

SHAFT CASING DETAILS IN DEEP EXCAVATIONS OR HIGH WATER

English to Metric Shaft Casing Comparison

"English" Shaft Size O.D.	Nearest Metric Casing O.D.	Workspace Between Casings	Recommended Surface Casing I.D.
3'	1.00m (3.28')	2 x 1.5" = 3"	3' - 6"
4'	1.20m (3.94')	2 x 2" = 4"	4' - 4"
5'	1.50m (4.92')	2 x 2" = 4"	5' - 4"
6'	2.00m (6.56')	2 x 2" = 4"	6' - 11"
7'	2.20m (7.22')	2 x 2" = 4"	7 - 6"
8'	2.50m (8.20')	2 x 2" = 4"	8' - 6"
9'	2.75m (9.02')	2 x 2" = 4"	9' - 4"
10'	3.00m (9.84')	2 x 2" = 4"	10' - 4"

Slip Casing with Oscillator Method

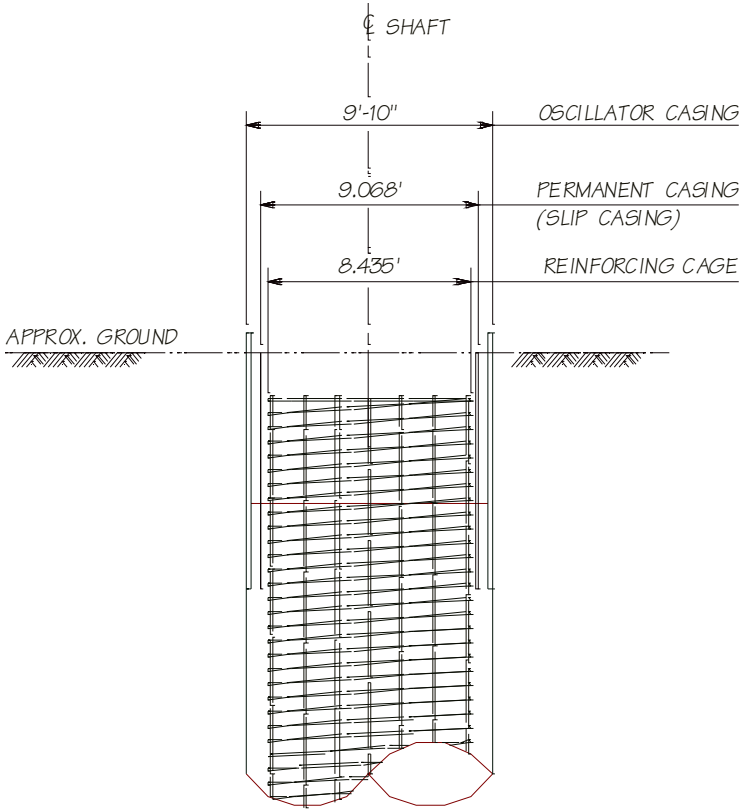

INSTALL SLIP CASING

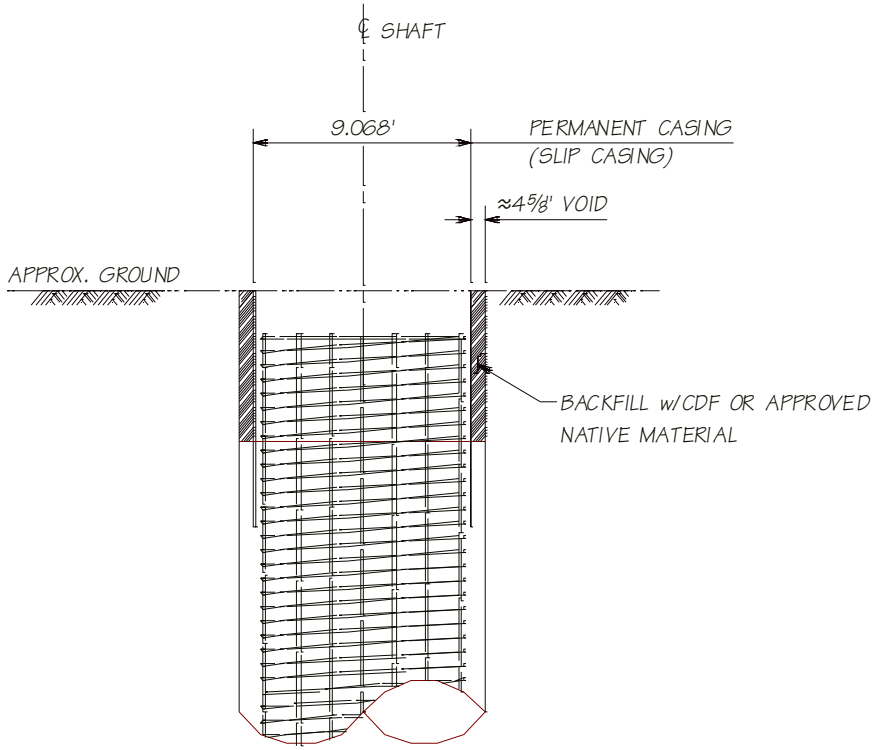

BACKFILL VOID

10'Ø SHAFT CONSTRUCTED
WITH THE OSCILLATOR METHOD

OSCILLATOR CASING SIZES AND REQUIRED CAGE AND CASING SIZES

Assuming 6" of clearance from outside of cage on 5' diam. & larger. 4" for 5' or smaller.

Assuming 6" of clearance from outside of cage on 5' diam. & larger. 4" for 5' or smaller.

See chart below for clearance per size & type.

Assume minimum of 5 inches of clearnace to inside of osc. Casing on 5 foot and larger. Use 3 inches of clearance on 4' and smaller.

Drop in Casing is 3" smaller than ID of te 1.2M to 3M. 1M on dow n is 2" smaller in

	Oscillator Casing Size												
U.S. Shaft Size	Nominal U.S. Shaft Size	Nominal Metric Shaft Size	O.D. of Casing Meter	O.D. of Casing Inch	O.D. of Casing Feet	I.D. of Casing Meter	I.D. of Casing Inch	I.D. of Casing Feet	Cage Clearance	US O.D. of Steel Cage US Shafts	US O.D. of Steel Cage M Shafts	O.D. of Slip Casing Meter	O.D. of Slip Casing Inch
10' shaft	9' 10" shaft	3 meter	3.00	118.08	9.84	2.84	111.81	9.32	6"	9.000	8.435	2.764	108.810
9' shaft	9' 2" shaft	2.8 meter	2.80	110.21	9.18	2.68	105.51	8.79	6"	8.000	7.910	2.604	102.510
8' shaft	8' 2" shaft	2.5 meter	2.50	98.40	8.20	2.38	93.70	7.81	6"	7.000	6.925	2.304	90.700
7' shaft	7' 2 1/2"shaft	2.2 meter	2.20	86.59	7.22	2.08	81.89	6.82	6"	6.000	5.941	2.004	78.890
6' shaft	6' 6" shaft	2.0 meter	2.00	78.72	6.56	1.88	74.02	6.17	6"	5.000	5.285	1.804	71.020
6' shaft	5' 10" shaft	1.8 meter **	1.80	**Not yet in Malcolm Arsenal					6"	5.000			
5' shaft	4' 11" shaft	1.5 meter	1.50	59.04	4.92	1.40	55.12	4.59	4"	4.333	3.710	1.324	52.120
4' shaft	3' 11" shaft	1.2 meter	1.20	47.23	3.94	1.12	44.09	3.67	4"	3.333	3.174	1.044	41.090
3' shaft	3' shaft	1.0 meter	1.00	39.36	3.28	0.92	36.22	3.02	4"	2.333	2.518	0.869	34.220
3' shaft	3' shaft	.915 meter	0.92	36.01	3.00	0.84	32.87	2.74	4"	2.333	2.239	0.784	30.870
2' shaft	2' shaft	.700 meter	0.70	27.55	2.30	0.62	24.41	2.03	4"	1.333	1.534	0.569	22.410

** 1.8 meter casing is not in our fleet as of yet. For 6' & 5' diameter shafts, use 2.0 meter casing unless you can get 1.5M casing approved for 4'11" s

Per the BDM design Memorandum WSDOT and most Engineers use the following:

Size	Cage Clearance
5' diameter or larger	6"
<5' to 4' Diameter	4"
<4' Diameter	3" if uncased, 3" if casing remains & 4" if casing is required but is planned to be withdrawn.

U.S. Shaft Size	Nominal U.S. Shaft Size	Nominal Metric Shaft Size	Cage Clearance on Osc Shafts Below Drop in Casing (inch)	Cage Clearance on Osc. Shafts at Drop in Casing (inch)
10' shaft	9' 10" shaft	3 meter	8.4	3.8
9' shaft	9' 2" shaft	2.8 meter	7.6	3.8
8' shaft	8' 2" shaft	2.5 meter	7.6	3.8
7' shaft	7' 2 1/2"shaft	2.2 meter	7.6	3.8
6' shaft	6' 6" shaft	2.0 meter	7.6	3.8
6' shaft	5' 10" shaft	1.8 meter **	0.0	0.0
5' shaft	4' 11" shaft	1.5 meter	7.3	3.8
4' shaft	3' 11" shaft	1.2 meter	4.6	1.5
3' shaft	3' shaft	1.0 meter	4.6	2.0
3' shaft	3' shaft	.915 meter	4.6	2.0
2' shaft	2' shaft	.700 meter	4.6	2.0

- **Obtain preliminary shaft loads from SEISAB, STRUDL or SAAP model.**
- **Make first run of model with fixed base, increase column effective length to account for foundation flexibility.**
- **Use column forces from joint at top of foundation.**

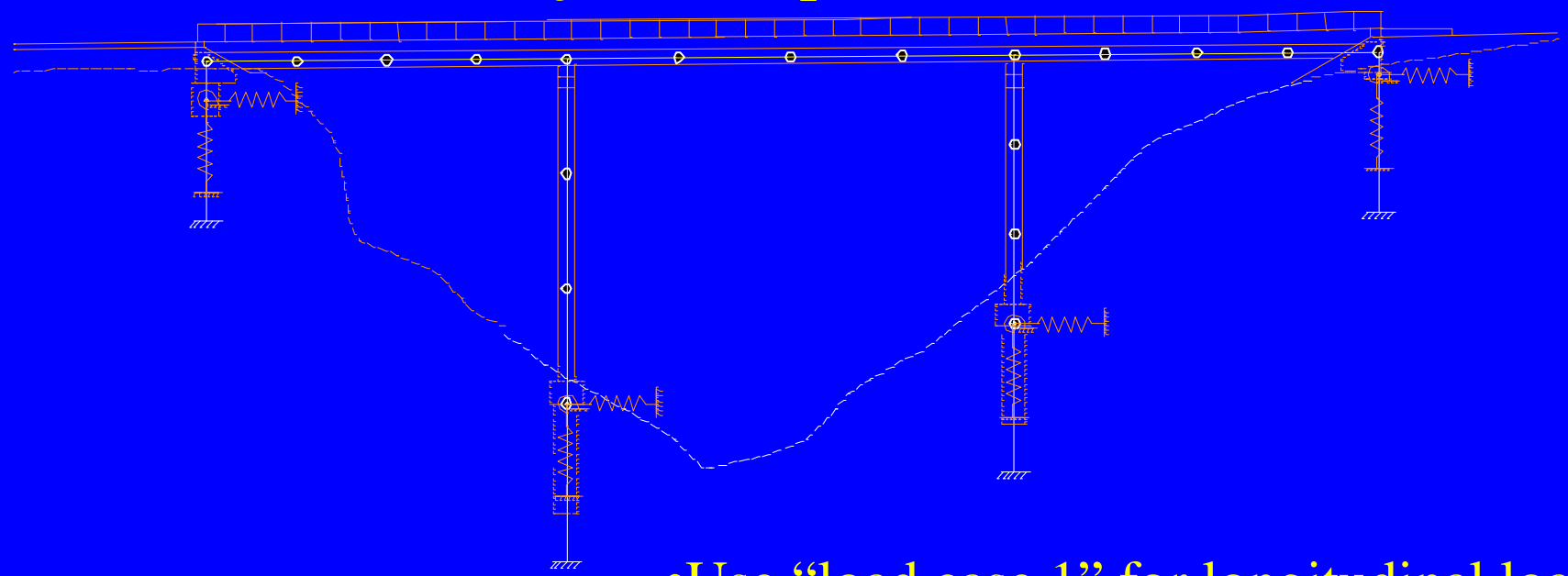

- Use “load case 1” for longitudinal loads.
- Use “load case 2” for transverse loads.

Bridge Finite Element Model

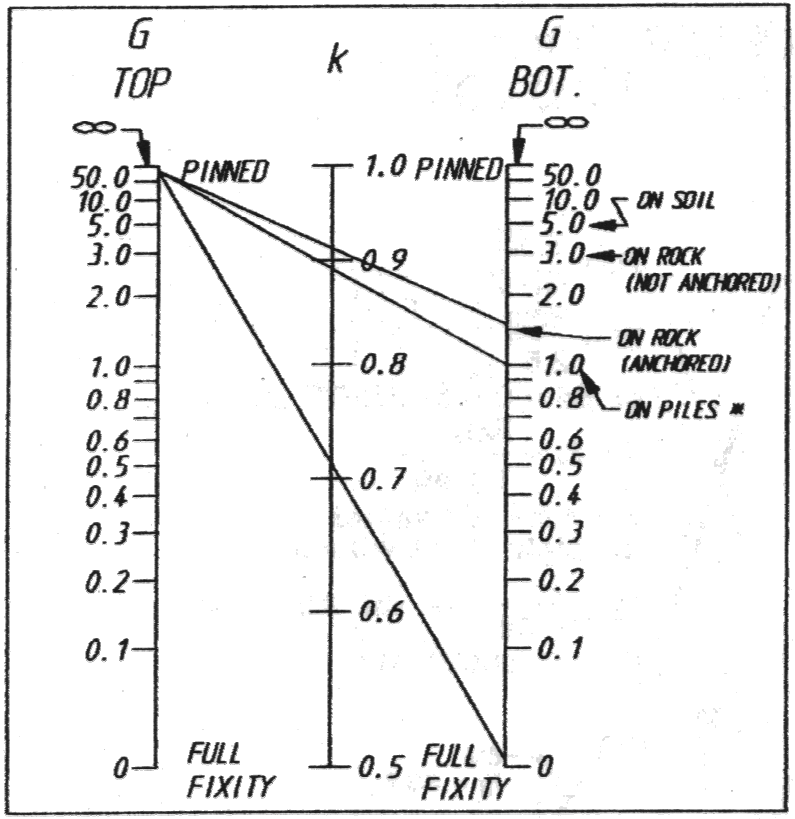

BRACED FRAME

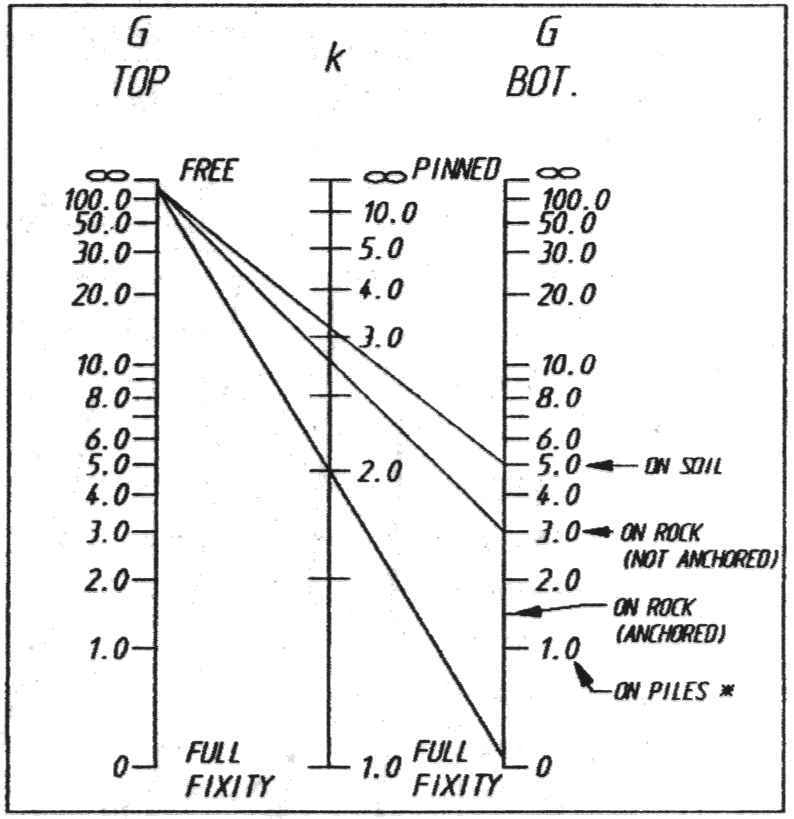

UNBRACED FRAME

4' Diameter Shaft

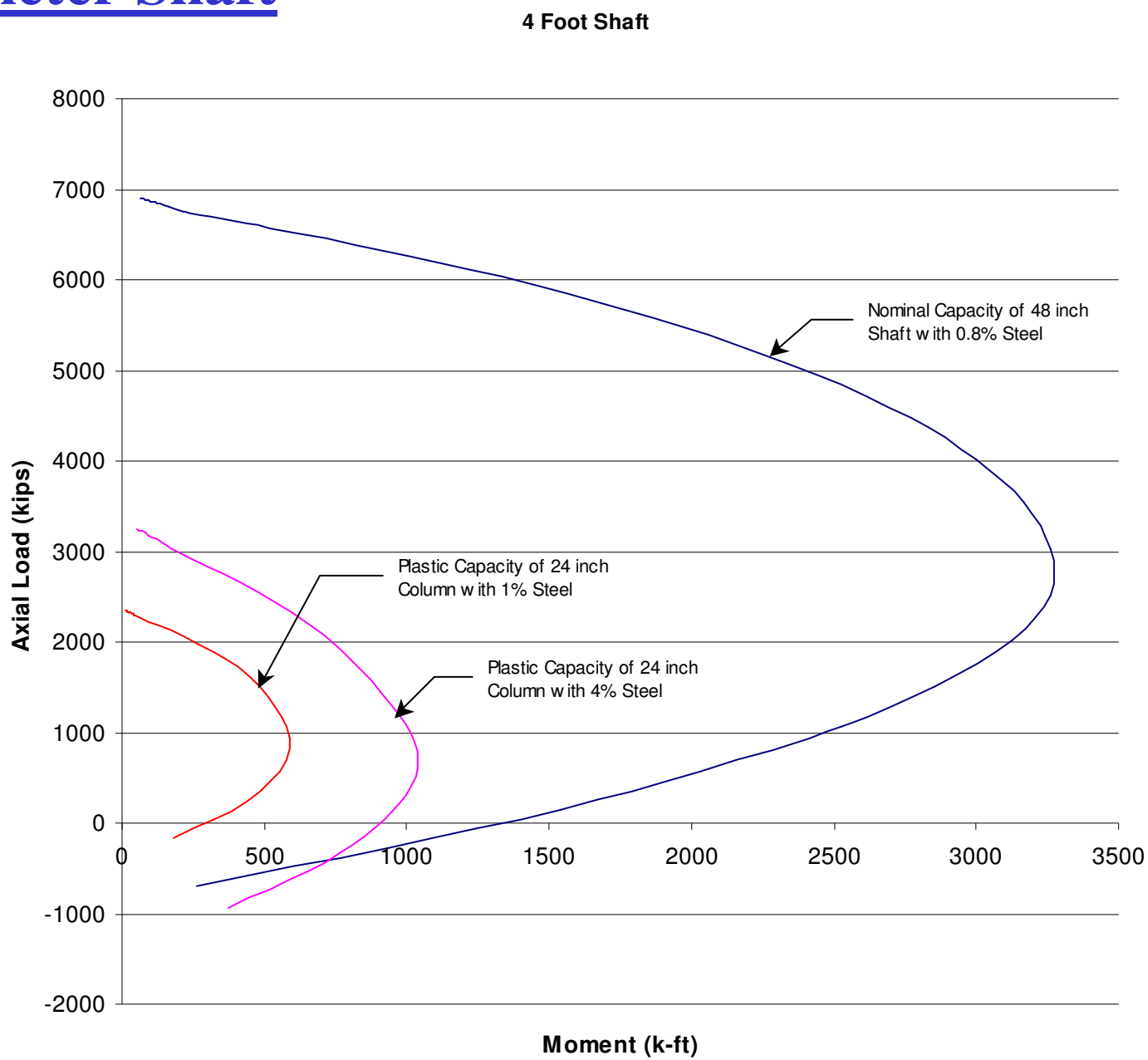

5’ Diameter Shaft

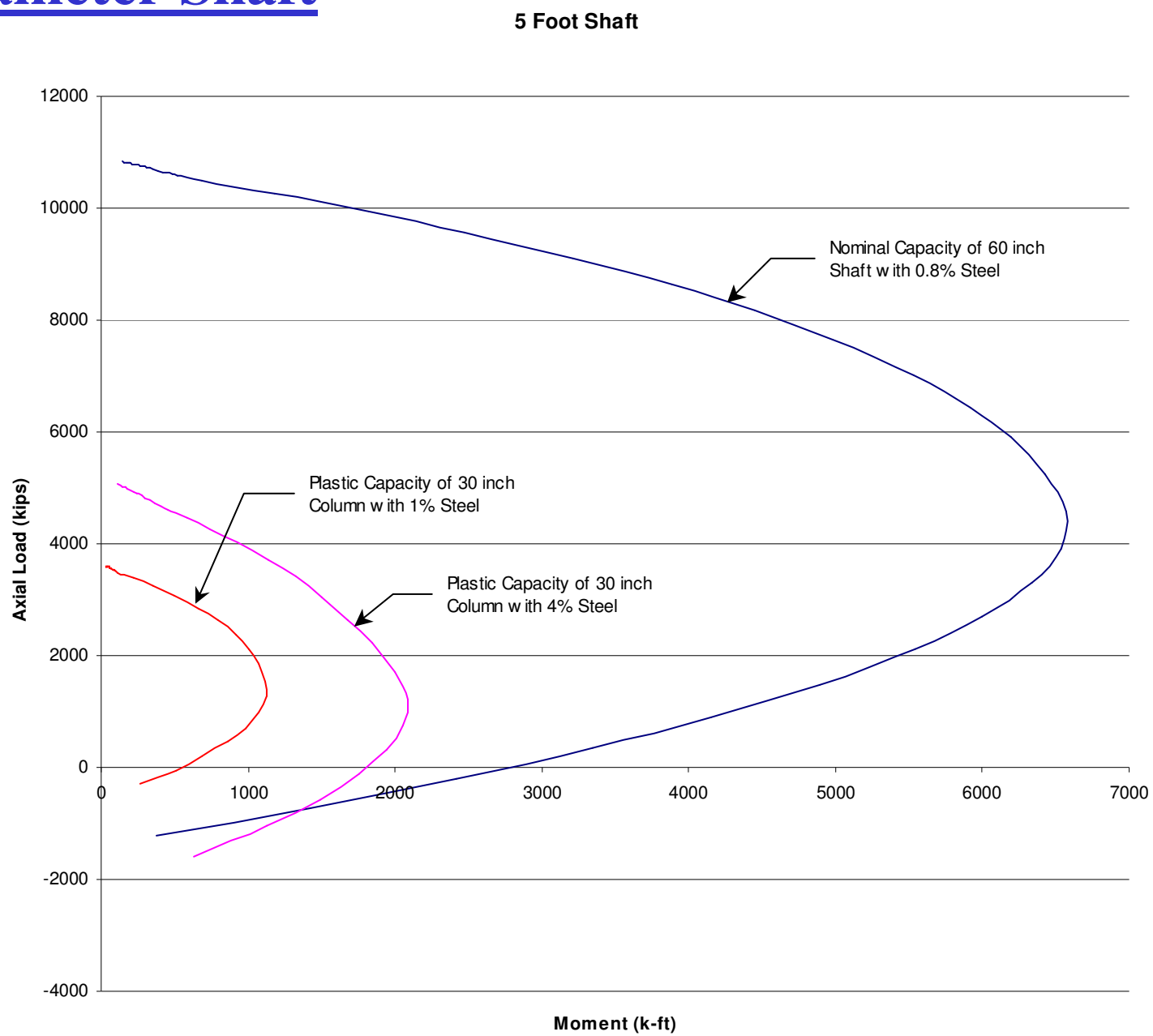

6' Diameter Shaft

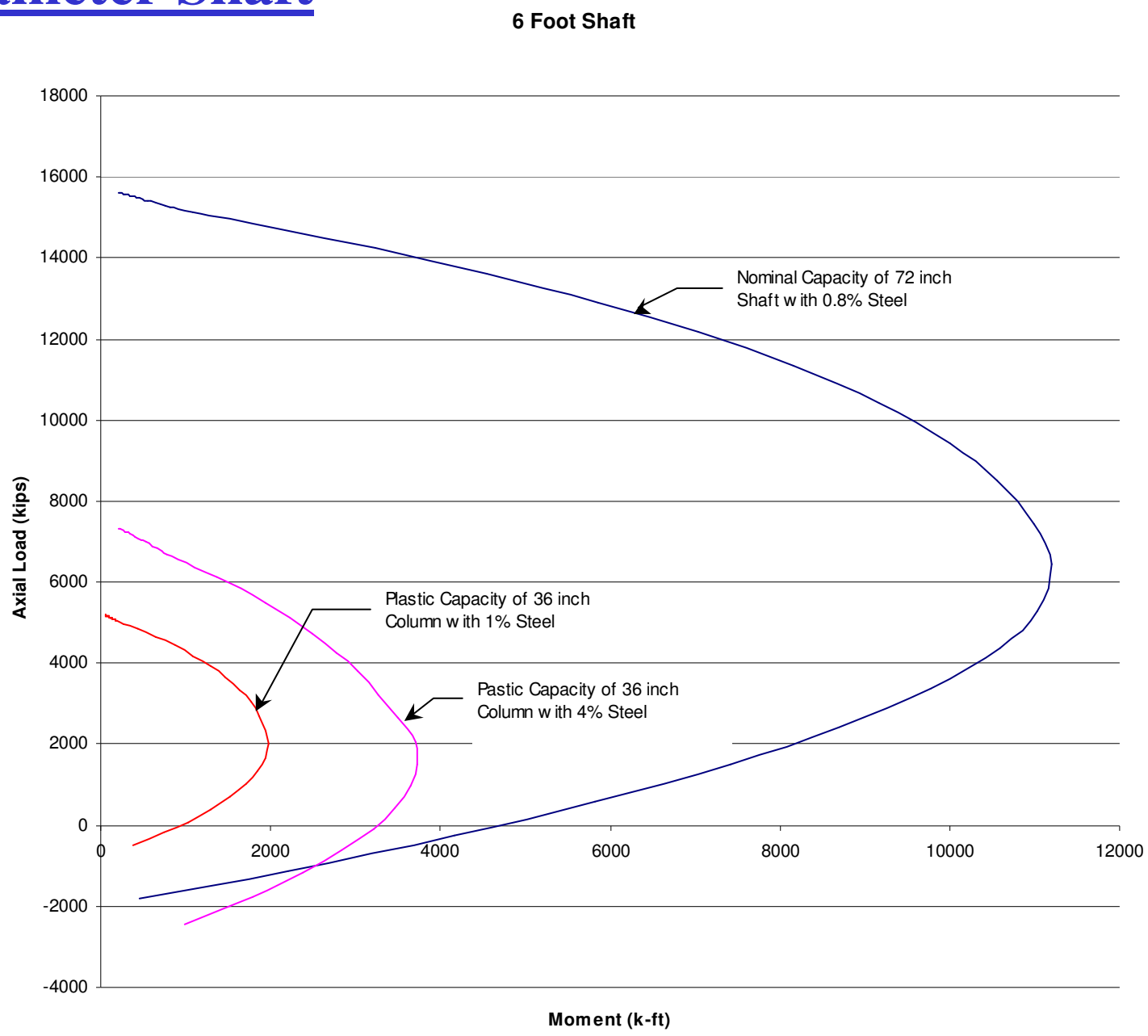

7' Diameter Shaft

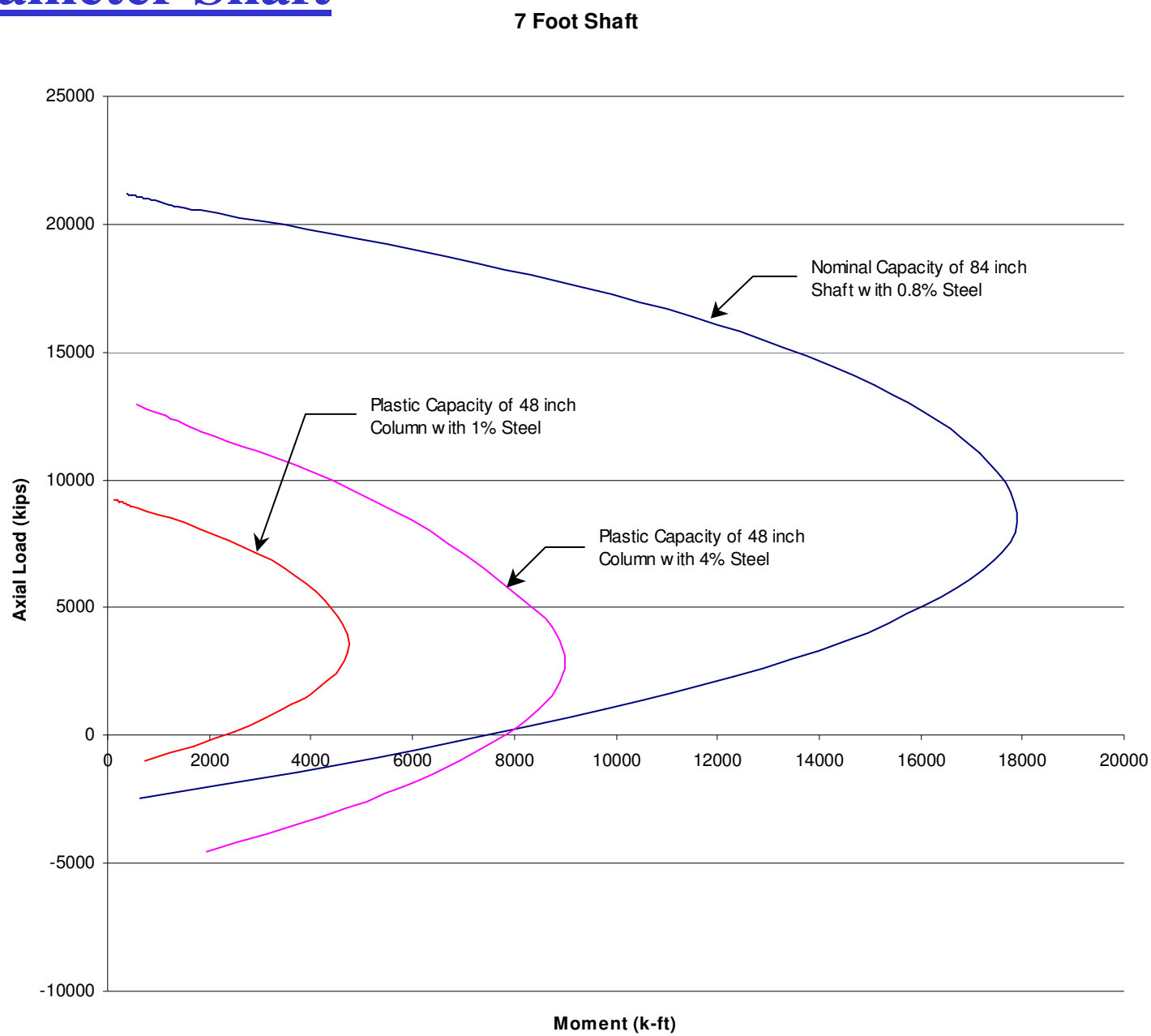

8' Diameter Shaft

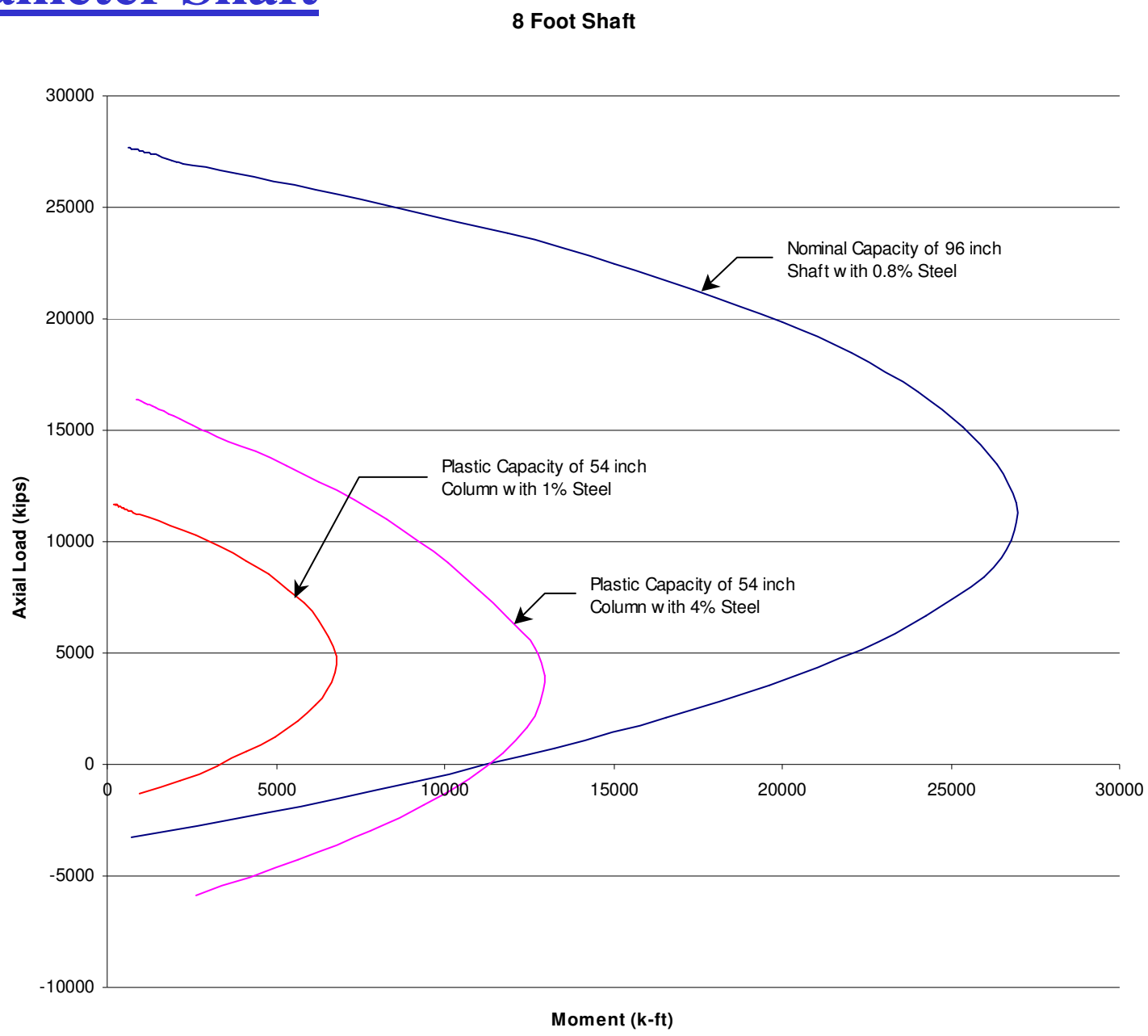

9' Diameter Shaft

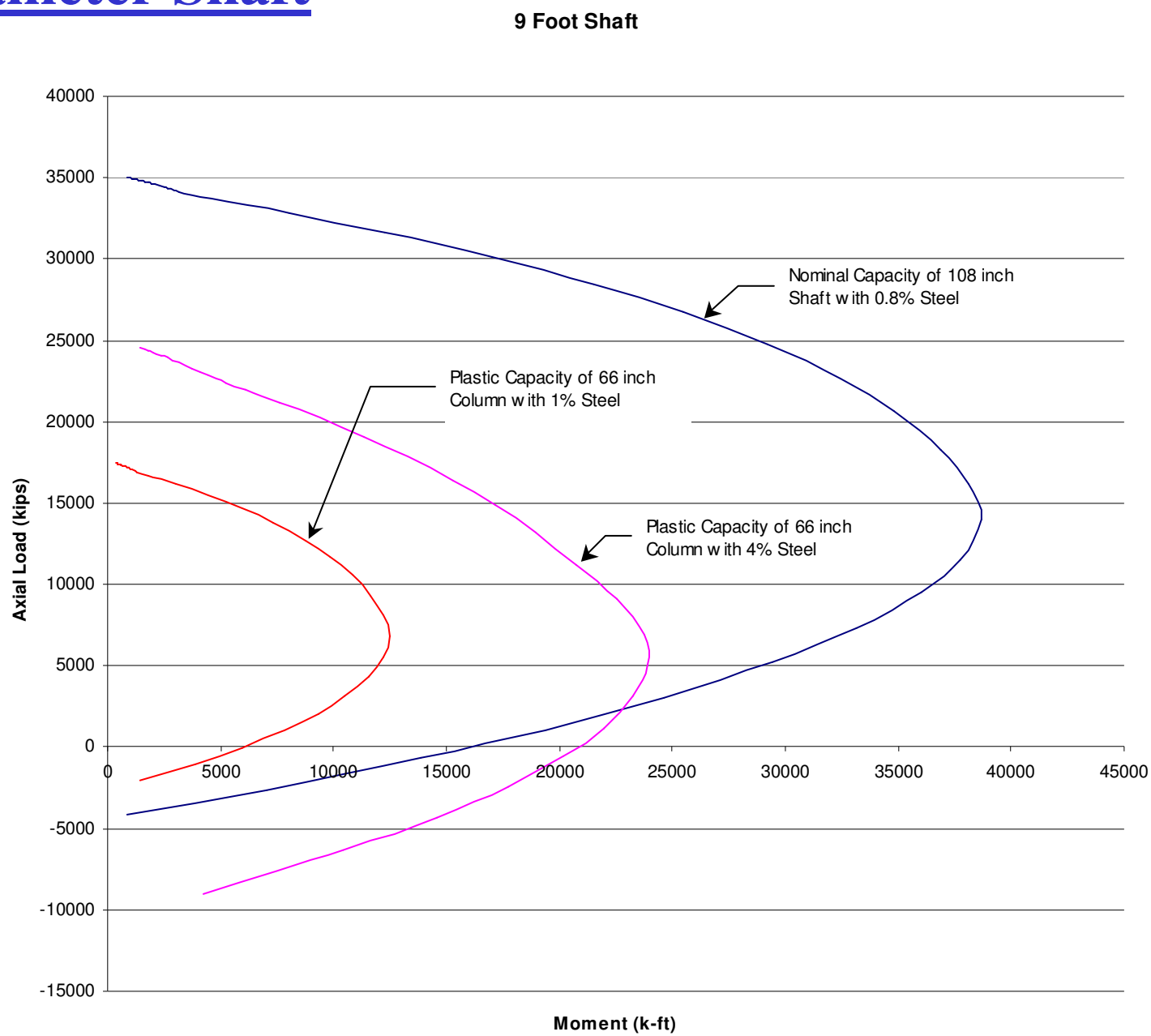

10’ Diameter Shaft

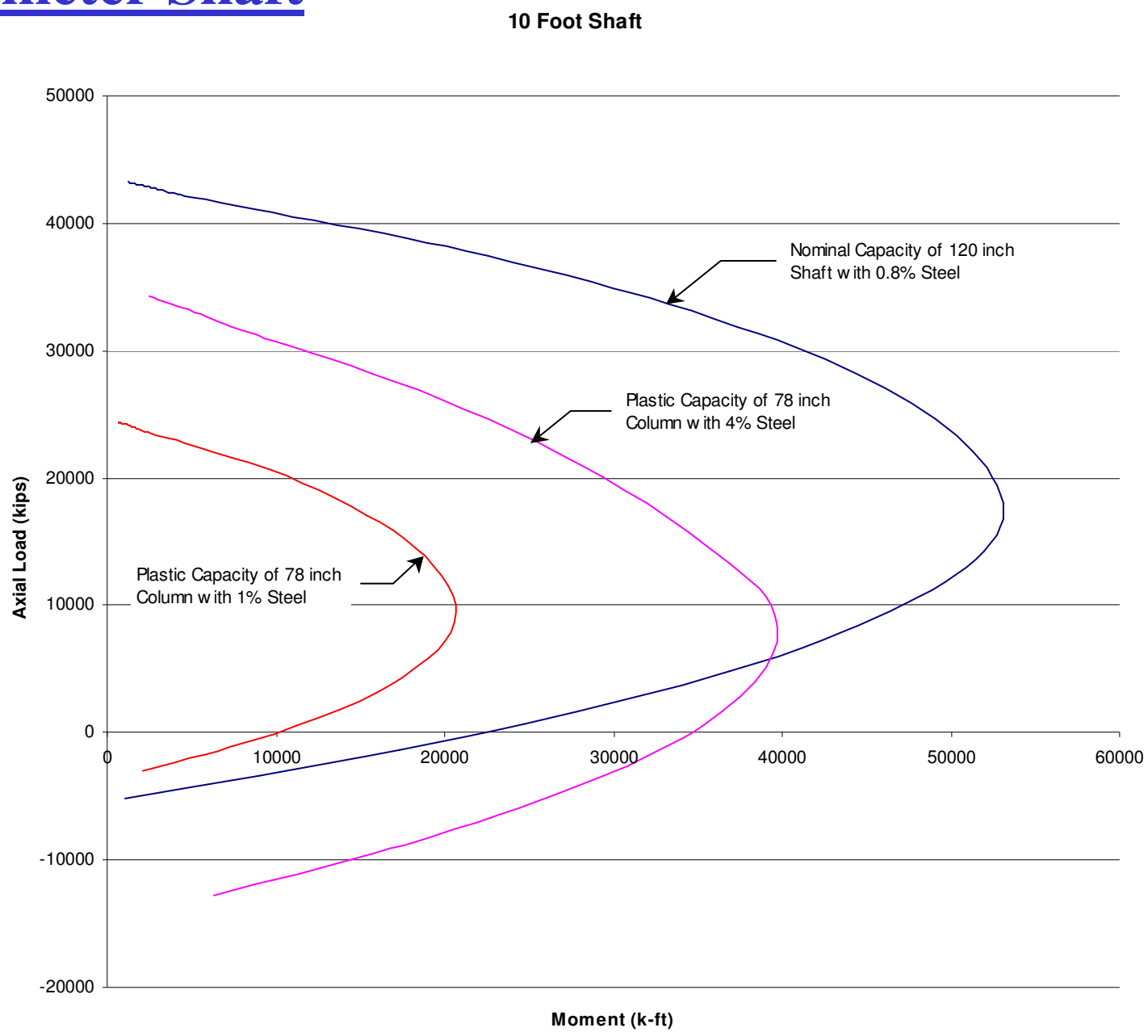

Develop Upper Bound

Foundation Stiffness Springs

- Static soil properties.
- Calculate Ec using 1.5 x f'c = 6000 psi based on 4000P concrete. I usually use 7500 psi for 4000P based on personal experience.
- Calculate Ig using a 6" increase in shaft diameter that is allowed by the Special Provisions plus permanent steel casing using ¾" thickness.

Develop Lower Bound

Foundation Stiffness Springs

- Dynamic soil properties.
- Calculate Ec using 0.85 x f'c = 3400 psi based on 4000P concrete.
- Calculate Ig using shaft plan diameter plus permanent steel casing using 3/8" thickness.

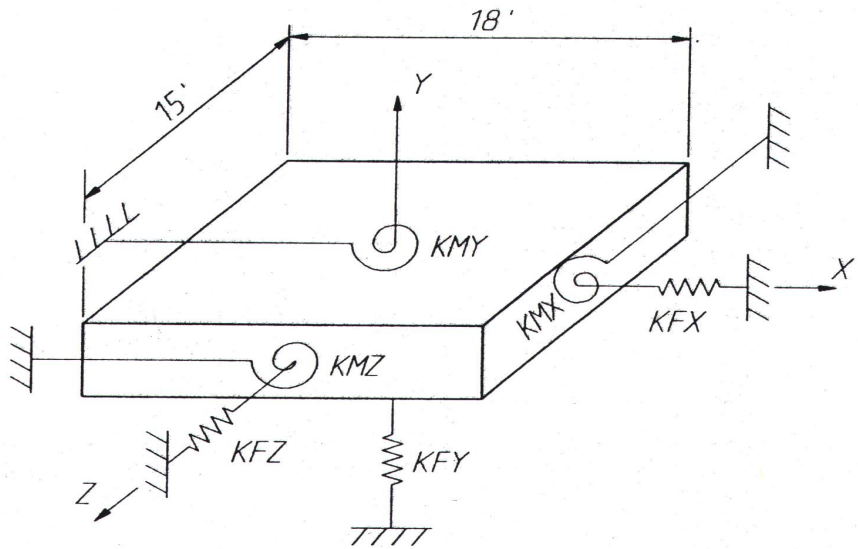

	FX	FY	FZ	MX	MY	MZ
	KFX	KFY	KFZ	KMX	KMY	KMZ
△ X	2.5×10^5	0	0	0	0	0
△ Y	0	6.0×10^5	0	0	0	0
△ Z	0	0	2.5×10^5	0	0	0
⊖ X	0	0	0	3.3×10^7	0	0
⊖ Y	0	0	0	0	5.0×10^7	0
⊖ Z	0	0	0	0	0	4.3×10^7

Spring Matrix

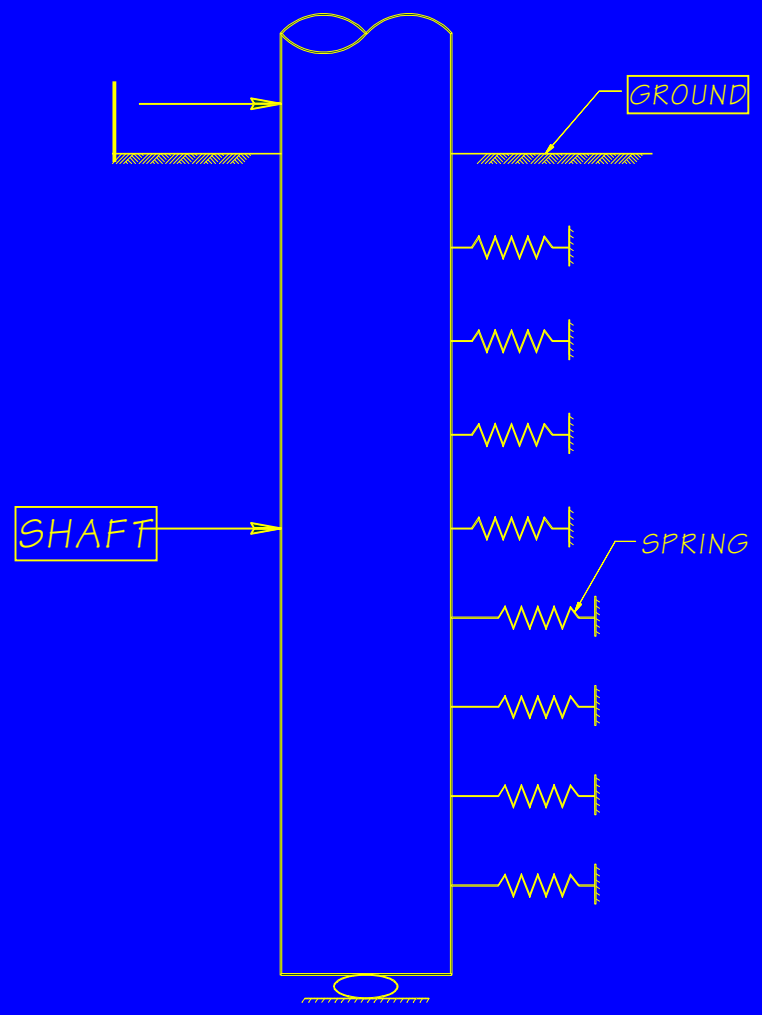

L-Pile or Finite Element Model

Account for Group Reduction

TABLE 9-14 LATERALLY LOADED PILE GROUPS STUDIES						
Soil Type	Test Type	Center to Center Pile Spacing	Calculated p-Multipliers For Rows 1, 2, & 3+	Reported Group Efficiency	Deflection (mm)	Reference
Stiff Clay	Field Study	3b	.70, .50, .40	---	51	Brown *et. al*, (1987)
Stiff Clay	Field Study	3b	.70, .60, .50,	---	30	Brown *et. al*, (1987)
V. Dense Sand	Field Study	3b	.80, .40, .30	75%	25	Brown *et. al*, (1988)
M. Dense Sand	Centrifuge Model	3b	.80, .40, .30	74%	76	McVay *et. al*, (1995)
M. Dense Sand	Centrifuge Model	5b	1.0, .85, .70	95%	76	McVay *et. al*, (1995)
Loose M. Sand	Centrifuge Model	3b	.65, .45, .35	73%	76	McVay *et. al*, (1995)
Loose M. Sand	Centrifuge Model	5b	1.0, .85, .70	92%	76	McVay *et. al*, (1995)

Group Reduction Chart from Geotechnical Branch

Group Reduction Factors for P-y Analysis of a Single Row.

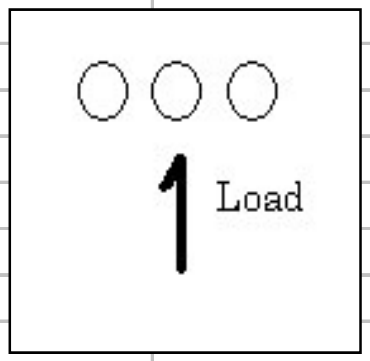

This table is based upon the method developed by Bob and Jim. It has been adjusted so that at 5D there is no reduction based on the McVay information in the table.

No. Shafts	2D	2.5D	3D	3.5D	4D	4.5D	5D
2	0.83	0.86	0.89	0.92	0.94	0.97	1.00
3	0.78	0.81	0.85	0.89	0.93	0.96	1.00
4	0.75	0.79	0.83	0.88	0.92	0.96	1.00
5	0.73	0.78	0.82	0.87	0.91	0.96	1.00
6	0.72	0.77	0.81	0.86	0.91	0.95	1.00
7	0.71	0.76	0.81	0.86	0.90	0.95	1.00
8	0.71	0.76	0.81	0.85	0.90	0.95	1.00
9	0.70	0.75	0.80	0.85	0.90	0.95	1.00
10	0.70	0.75	0.80	0.85	0.90	0.95	1.00

This table is based on the information from Brown and McVay which shows that at 3D the factor is 0.8 or 0.7

	2D	2.5D	3D	3.5D	4D	4.5D	5D
Dense Sand	0.70	0.75	0.80	0.85	0.90	0.95	1.00
Loose to Medium Dense Sand, Silts, Clays	0.55	0.63	0.70	0.78	0.85	0.93	1.00
PER TONY ALLEN USE -->	**0.60**	**0.70**	**0.80**	**0.85**	**0.90**	**0.95**	**1.00**

From Design and Constructiuon of Driven Pile foundations, Dec 1996 FHWA-HI-97-013; NHI Course 13221; Page 9-132

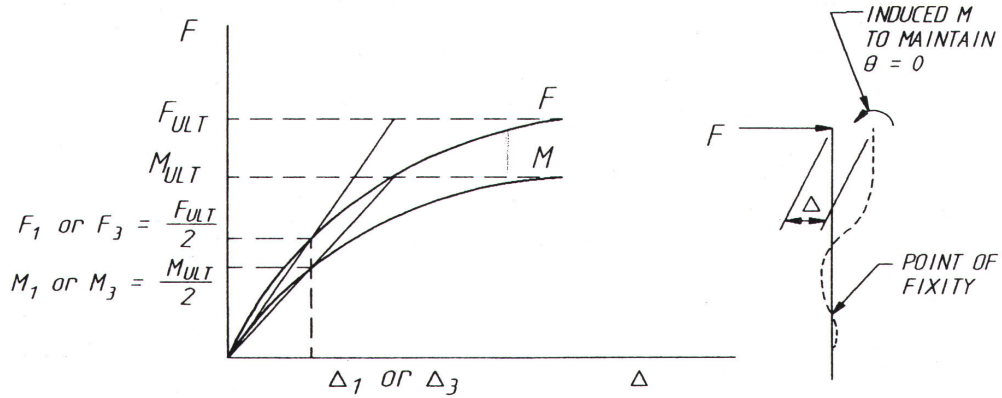

$KF1F1 = F_1/\Delta_1 \quad KF3K3 = F_3/\Delta_3$
(DIAGONAL TERMS IN 6 X 6 MATRIX)
$KM3F1 = -KM1F3 = M_3/\Delta_1 = -M_1/\Delta_3$
(OFF DIAGONAL TERMS)

Figure 4.4.3-2A

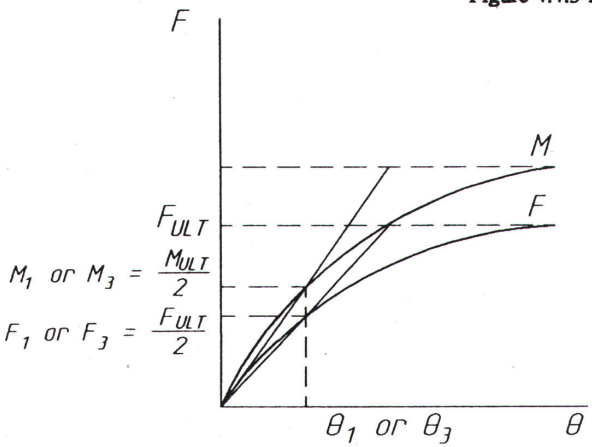

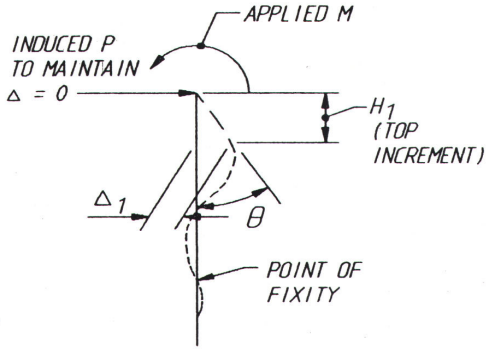

$KM1M1 = M_1/\theta_1 \quad KM3M3 = M_3/\theta_3$
(DIAGONAL TERMS IN 6 X 6 MATRIX)
$-KF3M1 = KF1M3 = -F_3/\theta_1 = F_1/\theta_3$
(OFF DIAGONAL TERMS)

Figure 4.4.3-2B

Run FEM Using Foundation Spring Curves

- Iterate FEM runs with foundation springs until results converge for both upper and lower bound solutions.
- Start with the minimum shaft length needed for axial capacity and increase depth until lateral superstructure deflections are acceptable in FEM.
- Compare results with fixed base model and initial column and shaft assumptions.
- Design column for final loads.

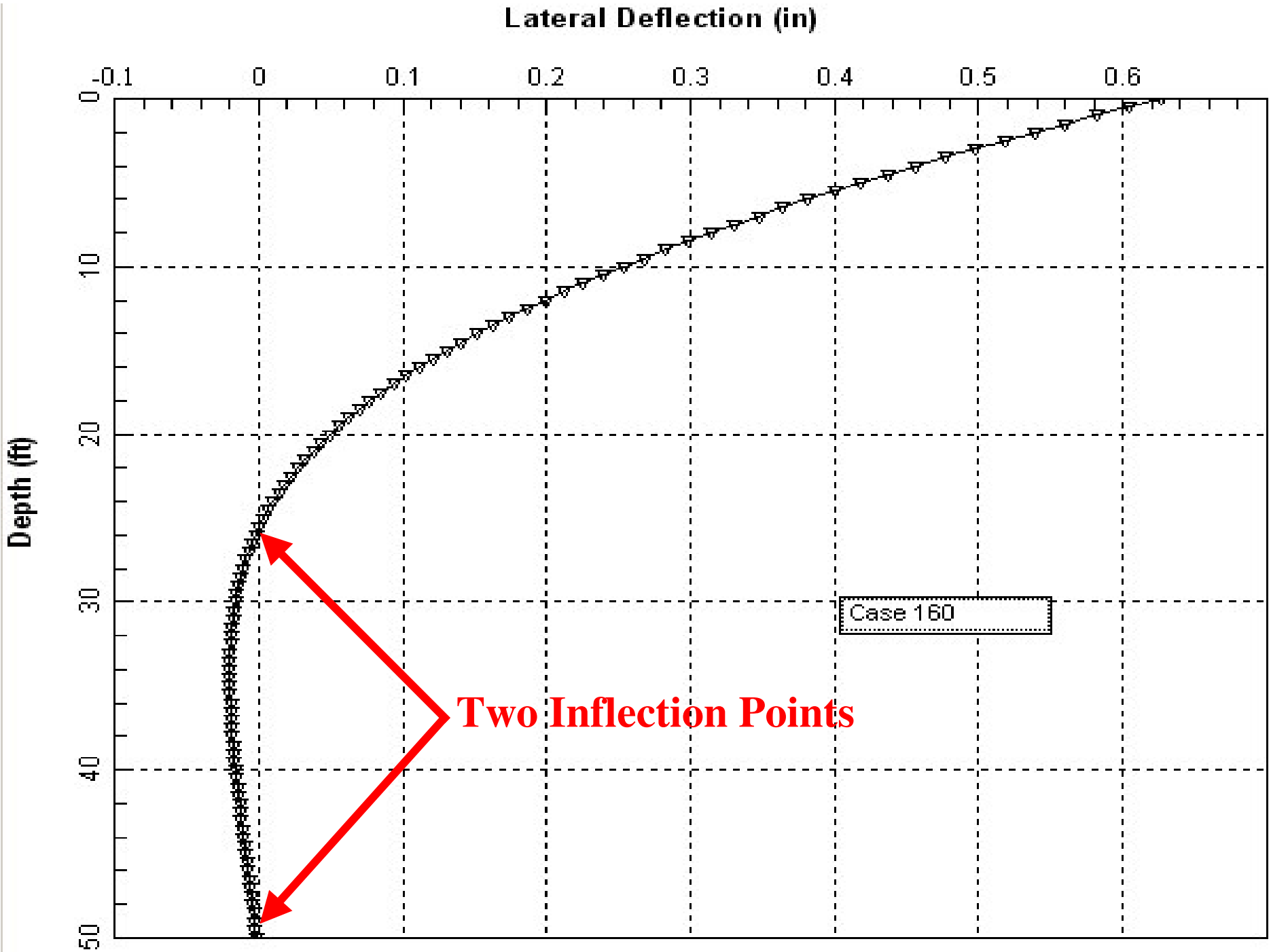
Lateral Deflection (in)
-0.1
0
0.1
0.2
0.3
0.4
0.5
0.6
Depth (ft)
0
10
20
30
40
50
Case 160
Two Inflection Points

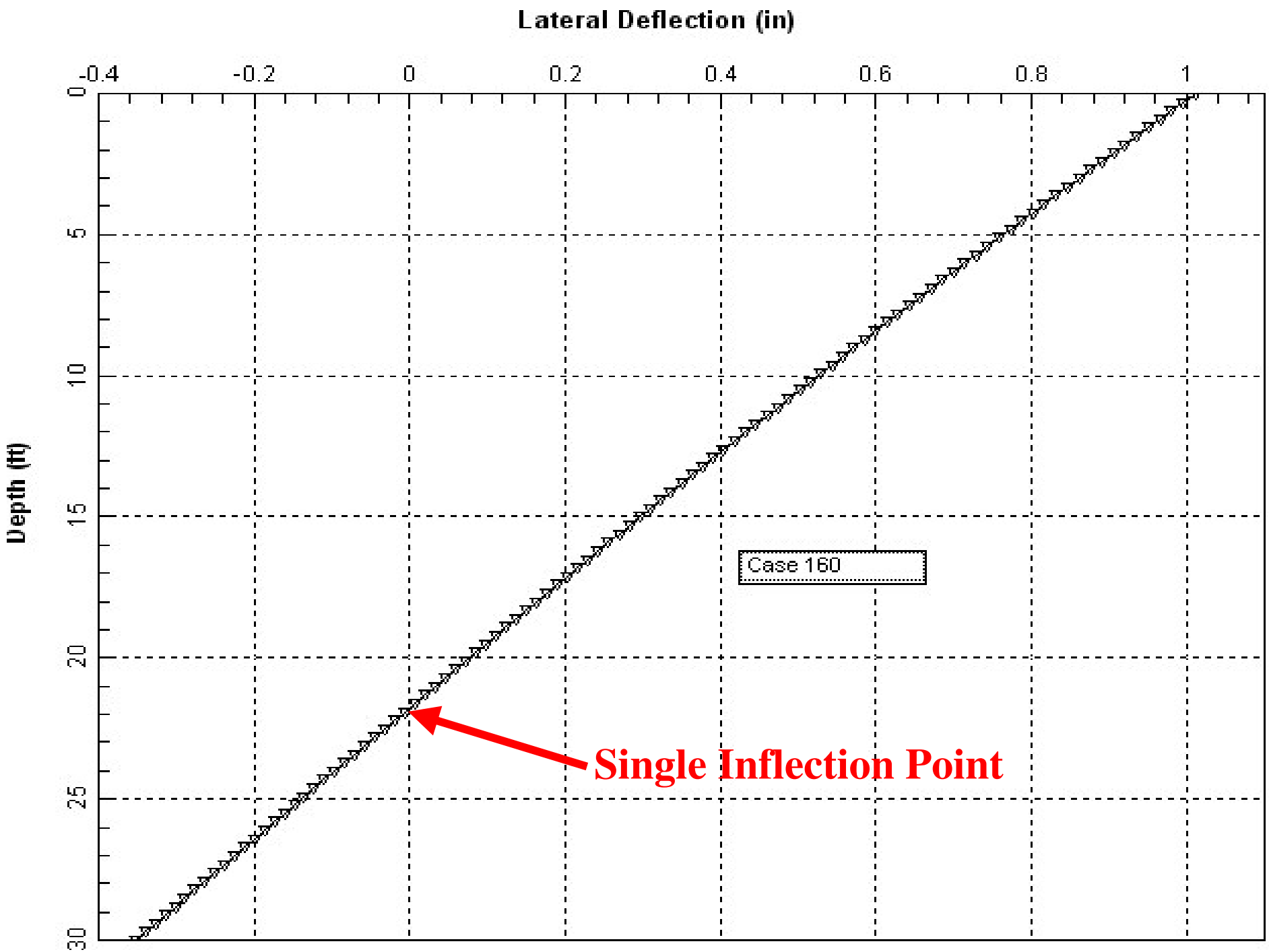
Lateral Deflection (in)
-0.4
-0.2
0
0.2
0.4
0.6
0.8
1
Depth (ft)
0
5
10
15
20
25
30
Case 160
Single Inflection Point

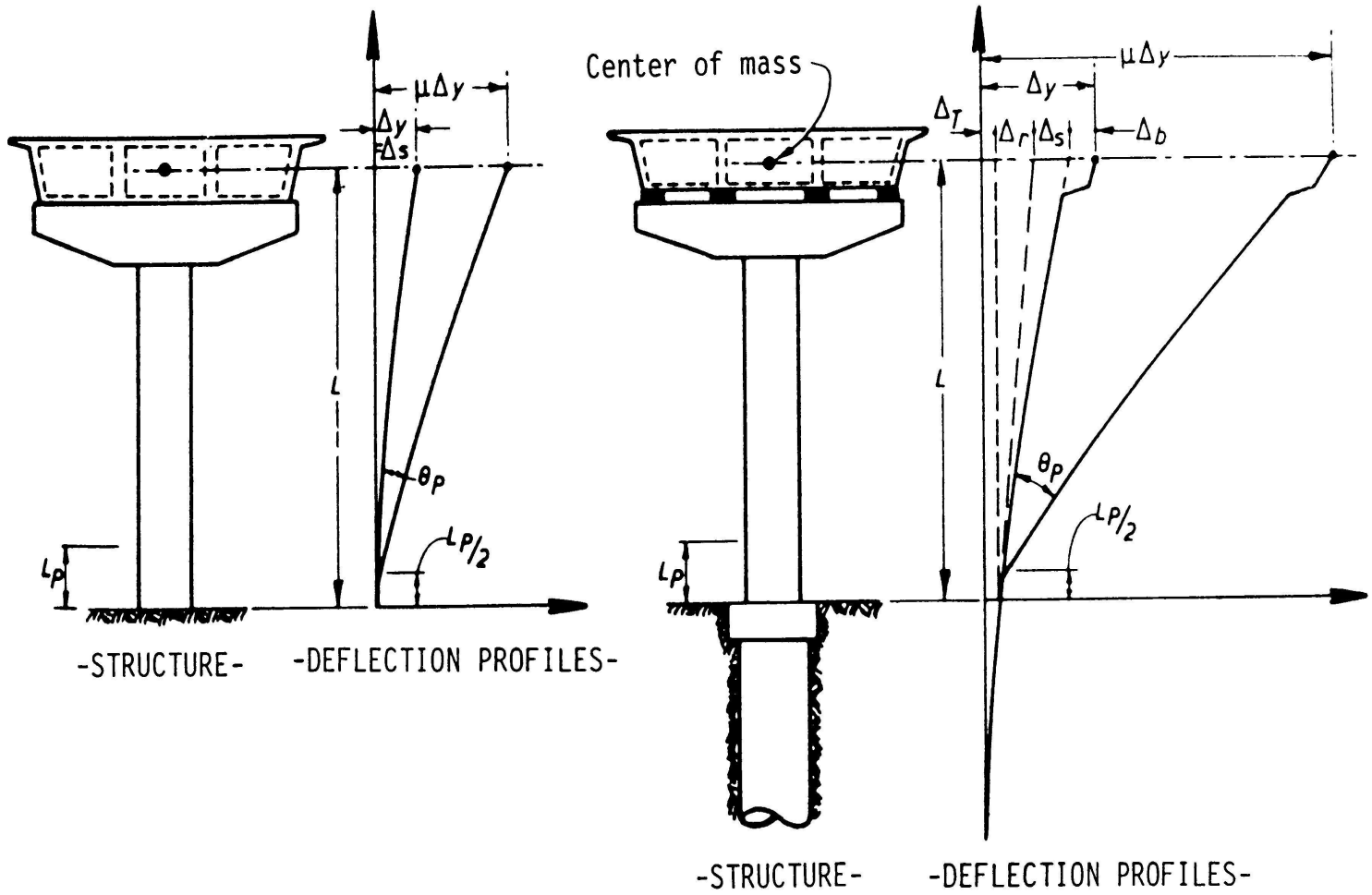
μΔy
Δy
Δs
L
θp
Lp/2
Lp
-STRUCTURE-
-DEFLECTION PROFILES-
Center of mass
μΔy
Δy
ΔT
Δr
Δs
Δb
L
θp
Lp/2
Lp
-STRUCTURE-
-DEFLECTION PROFILES-

Shaft Transverse Reinforcement

- Design for plastic shear induced by column or elastic shear (R=1), whichever is less, utilizing the column shear and transverse reinforcement provisions in AASHTO Division 1-A Seismic Design Specification 7.6.2(C).

- The column-shaft splice zone shall meet the requirement outlined in the TRAC Report titled "NONCONTACT LAP SPLICES IN BRIDGE COLUMN-SHAFT CONNECTIONS".

- The minimum clear spacing between spirals should be no less than 2.5". However, 6" minimum clear spacing is preferable.

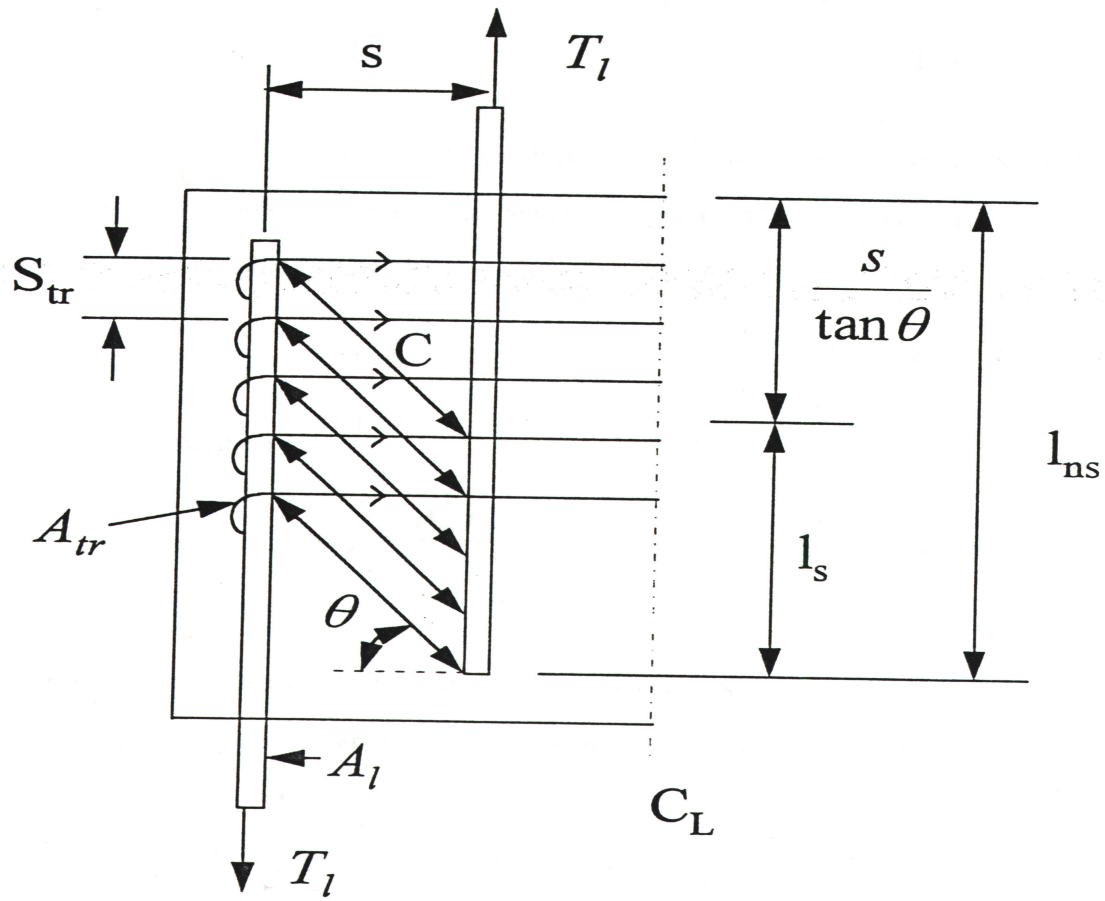

Figure 2 Proposed Two-Dimensional Behavioral Model for Noncontact Lap Splices.

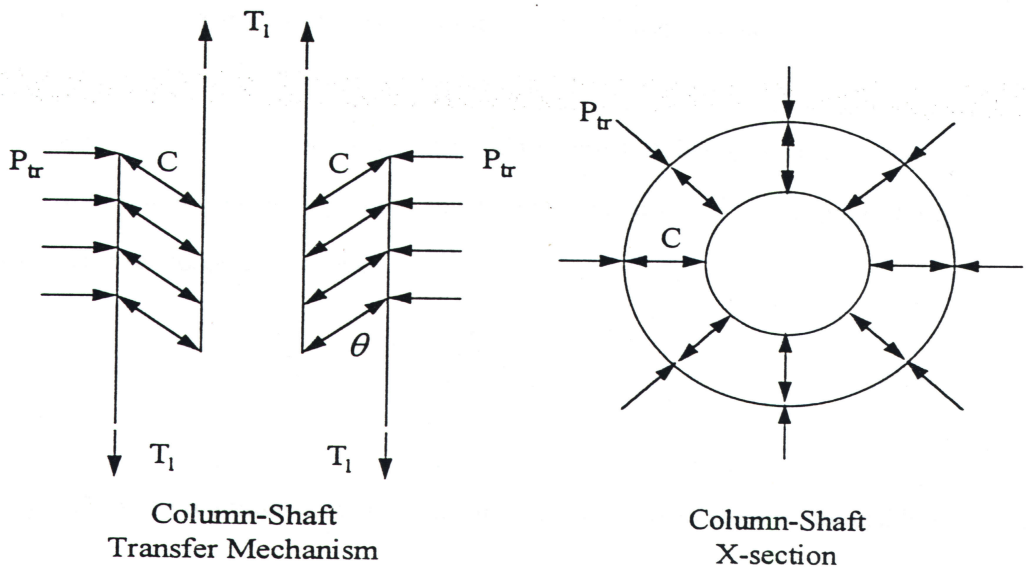

Figure 3 Proposed Three-Dimensional Behavioral Model for Noncontact Lap Splices.

Shaft Longitudinal Reinforcement

- Design the drilled shaft for the plastic moment (1.3Mn) induced by the column or the elastic seismic moment (R=1), whichever is less. This applies to all seismic zones in Washington State.

- The minimum reinforcing shall be 0.8% of the shaft's gross section or 1.0% of the attached column's gross section (if applicable), whichever is less.

- The minimum clear spacing between bars shall be no less than 2.5". However, 6" minimum clear spacing is preferable. If you are unable to attain this requirement, a larger diameter drilled shaft should be used.

0.8% Steel
41 - #14's
6 1/8" clr.

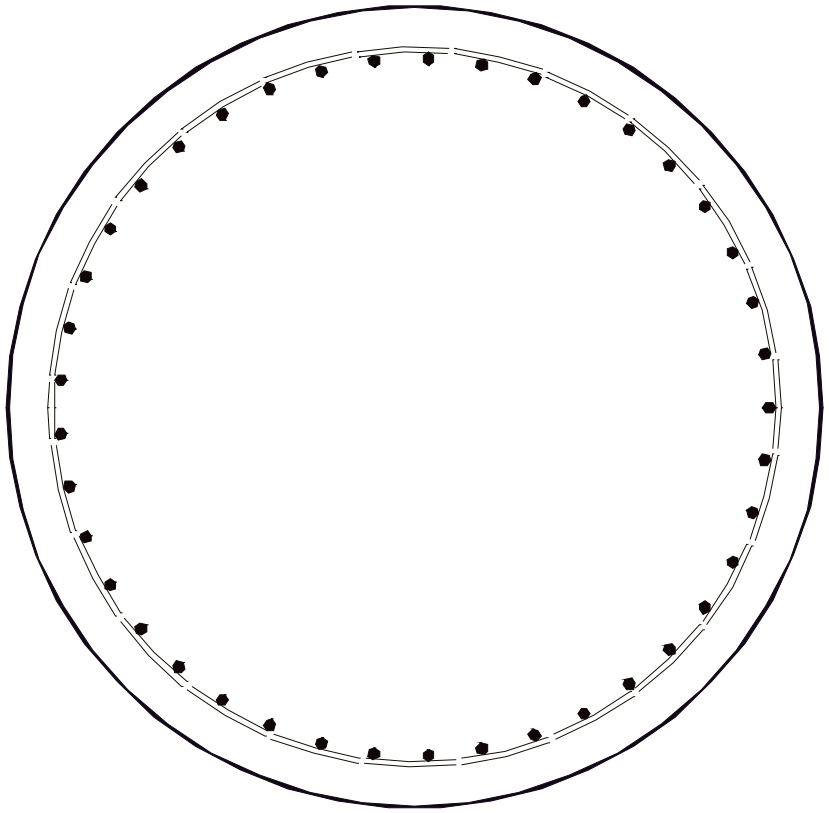

10' SHAFT - 0.8%

(41) #14's
SPA. BTWN. BARS = 6⅛"

1.0% Steel
52 - #14's
8 7/8" clr.

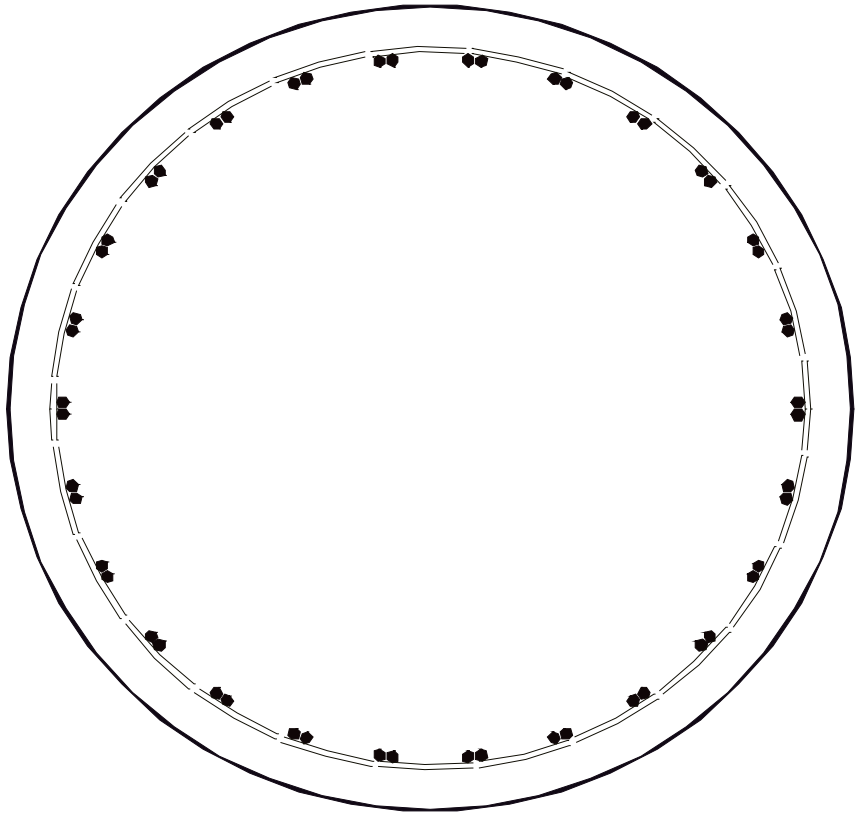

10' SHAFT - 1.0%

(52) #14's
SPA. BTWN. BARS = 8⅞"

2.0% Steel
102 - #14's
5 7/8" clr.

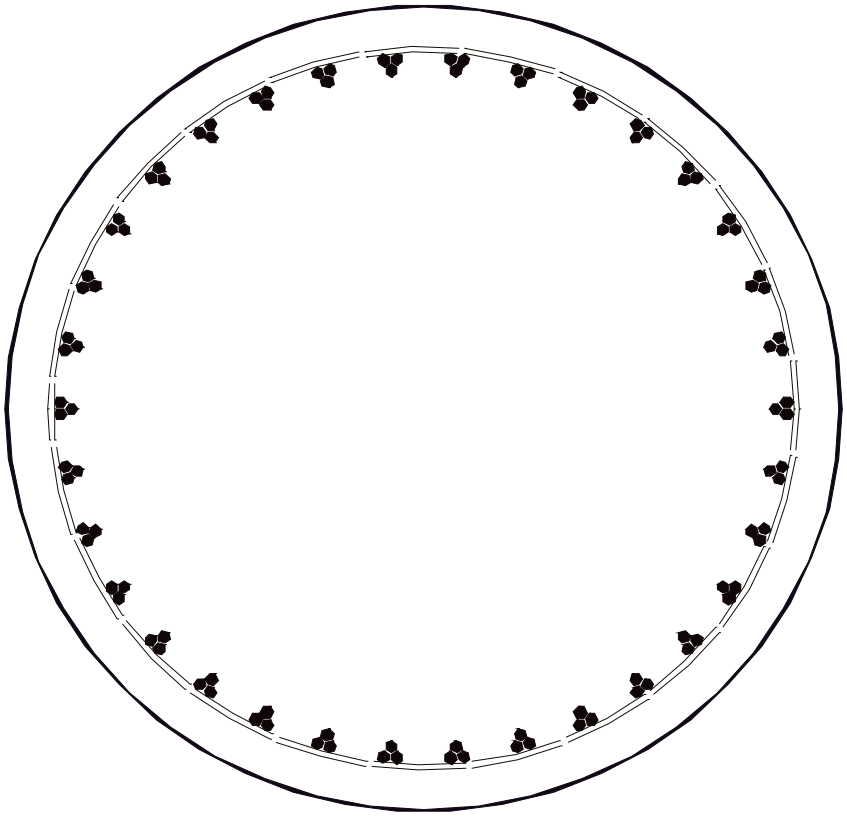

10' SHAFT - 2.0%

(102) #14's
SPA. BTWN. BARS = 5⅞"

Temporary Bracing For Reinforcing Cage

Sunset Shaft Resteel
Dibert 5-11-01

Sunset Shaft Resteel
Dibert 5-01

Centralizer Locations

“ Centralizers shall be placed at least at the quarter points around the circumference of the steel reinforcing bar cage, and at a max. longitudinal spacing of either 2.5 times the shaft diameter or 20’, whichever is less.”

CSL Tubes

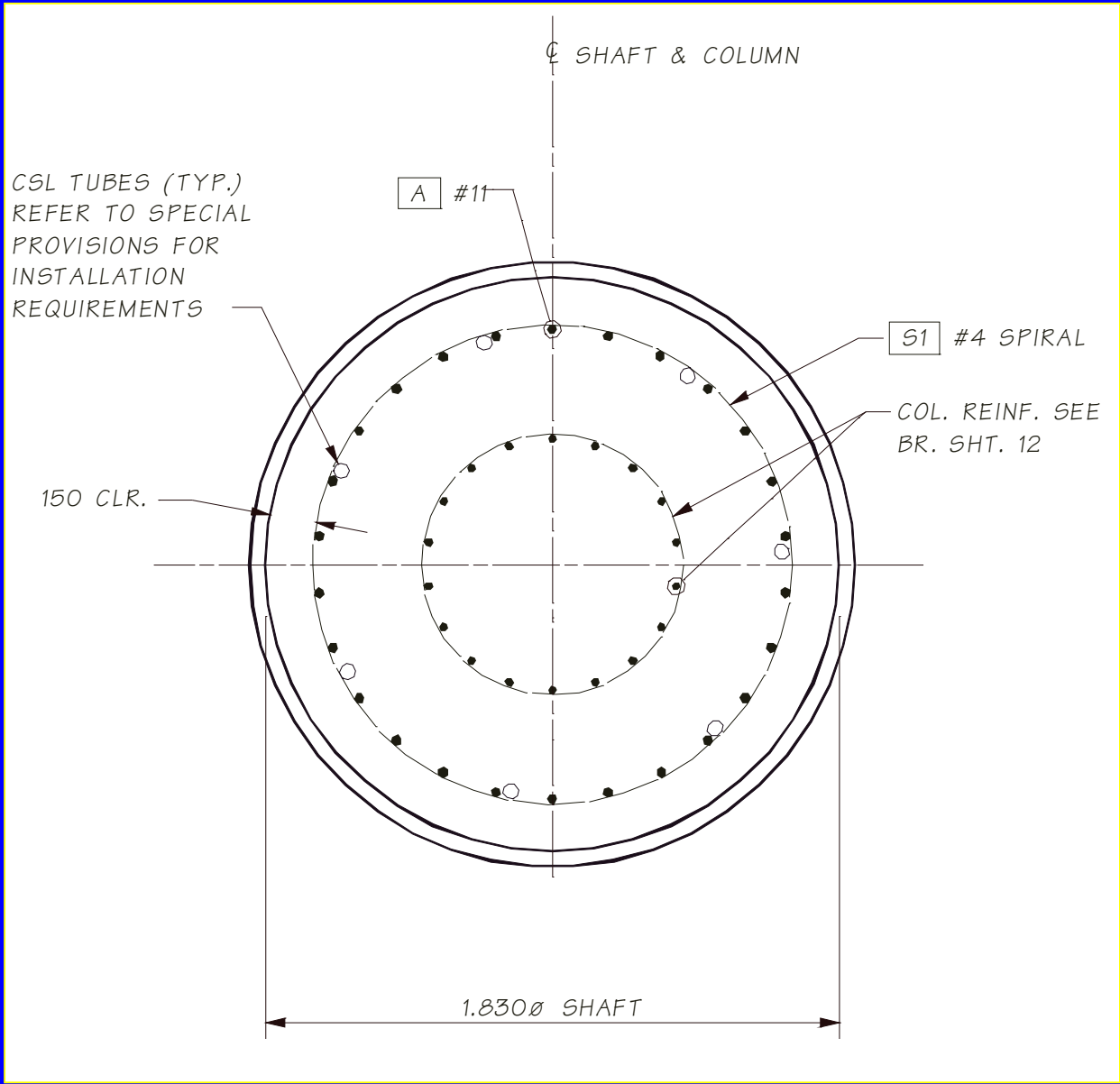
℄ SHAFT & COLUMN
CSL TUBES (TYP.)
REFER TO SPECIAL
PROVISIONS FOR
INSTALLATION
REQUIREMENTS
A #11
S1 #4 SPIRAL
COL. REINF. SEE
BR. SHT. 12
150 CLR.
1.830ø SHAFT

CSL end cap
Tubes straight & parallel

Avoid Hooked Bars

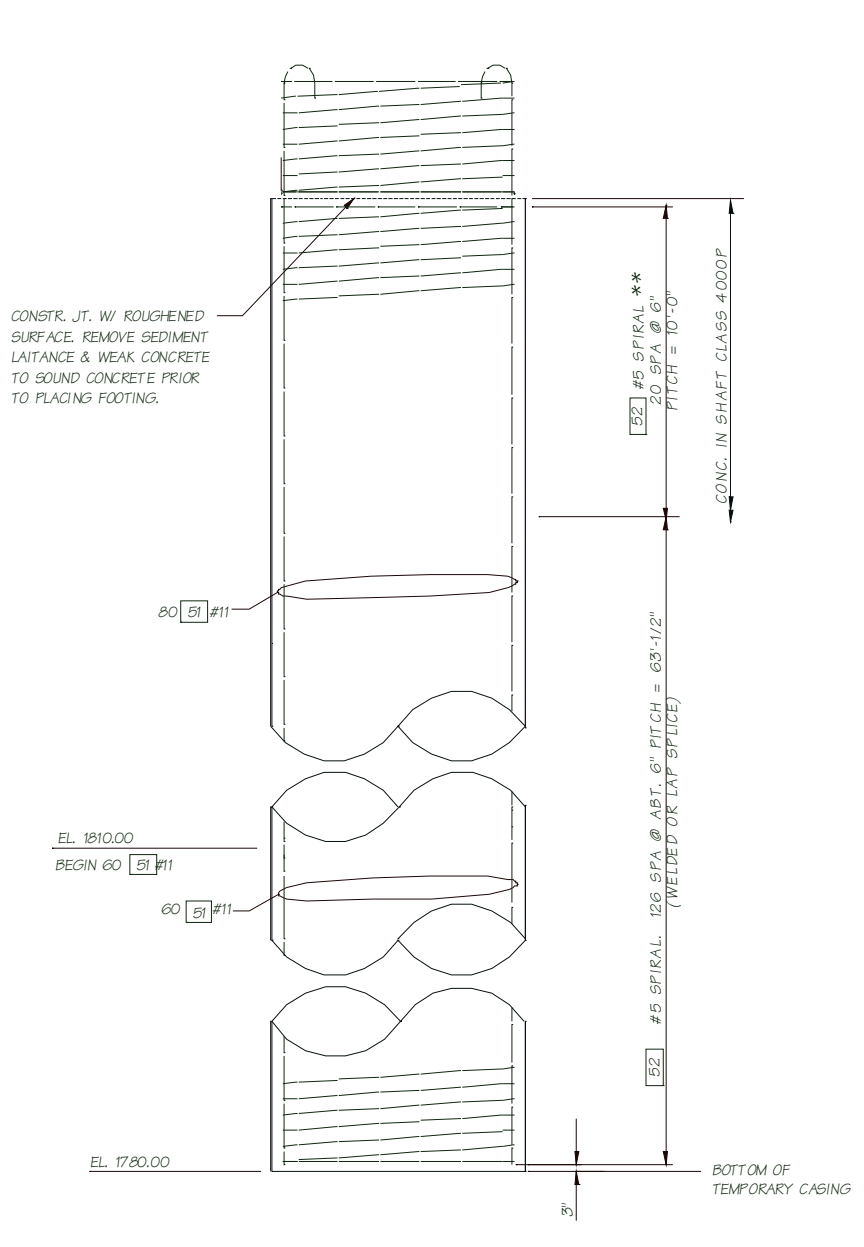

Stepped Bottom

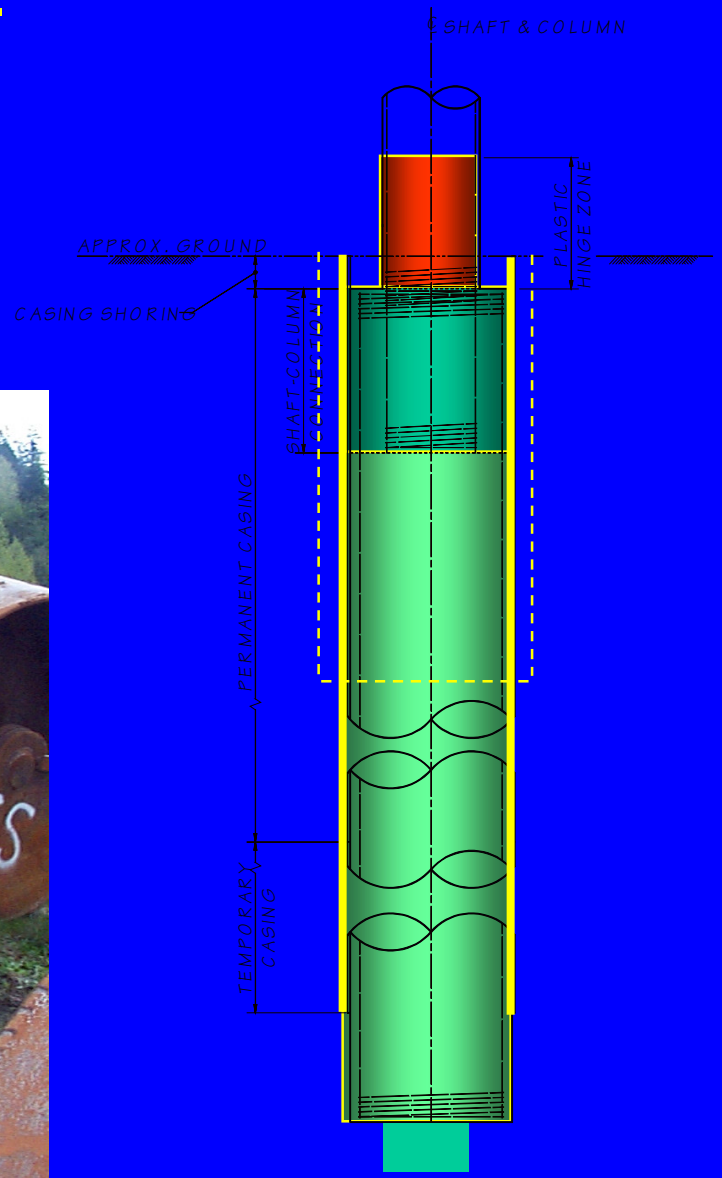

QUESTIONS ?

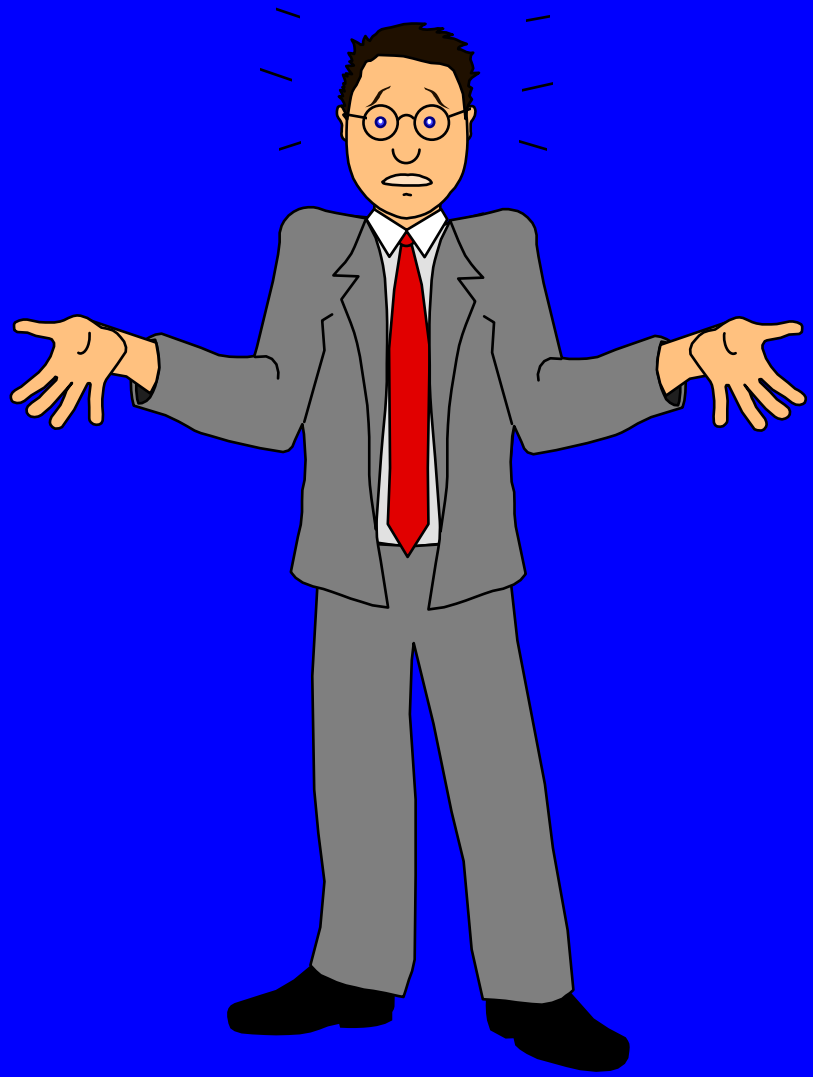

THE END